BRAND: *MAKOTA*	**STYLE NAME:** *M1*	**STYLE NUMBER:** *M1*
SEASON: *2025*	**SIZE:** *OSFM*	**DATE:** *Aug 06, 2025*

STRUCTURED 5 PANEL POLY MICROFIBER HAT

59 CM @ 4 SNAPS

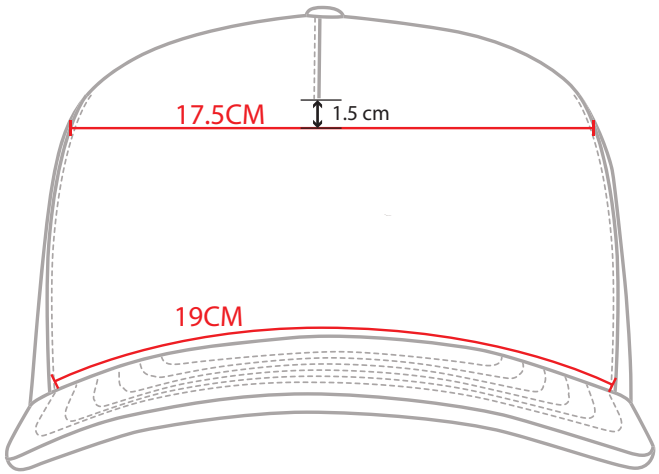

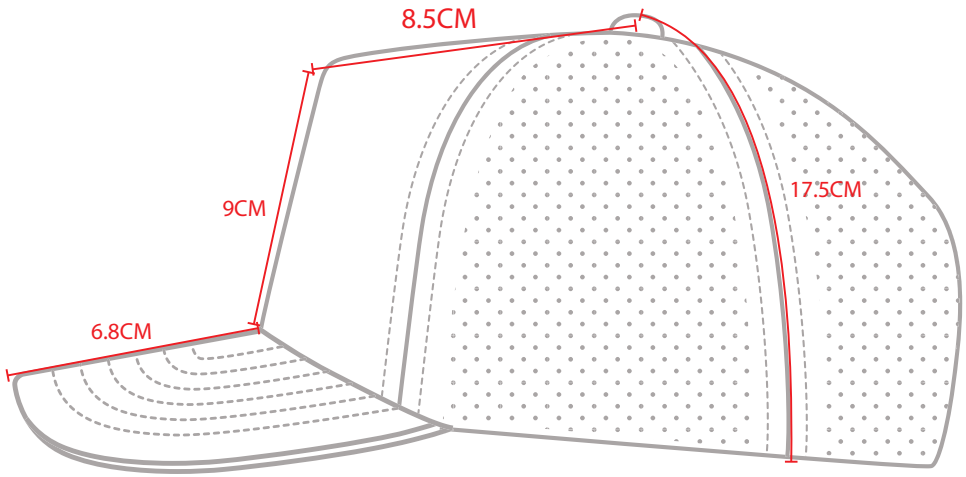

LOWER FRONT RISE WIDTH *= 19CM (+/- 3MM)*	**NOTES:**
UPPER FRONT RISE WIDTH (1.5CM DOWN FROM CENTER SEAM) *= 17.5CM (+/- 3MM)*	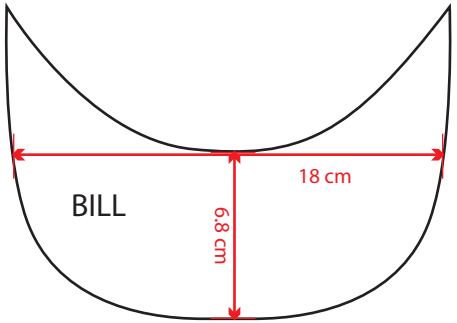
FRONT RISE HEIGHT *= 9CM (+/- 3MM)*	
FRONT RISE DEPTH (TO CENTER BUTTON) *= 8.5CM (+/- 3MM)*	
BILL LENGTH *= 6.8CM (+/- 3MM)*	
CROWN DEPTH (TO CENTER BUTTON) *= 17.5CM (+/- 3MM)*	
CIRCUMFRENCE *= 59CM AT 4 SNAPS*	

MAKOTA CO. // ***ALL RIGHTS RESERVED**

BRAND: *MAKOTA*	**STYLE NAME:** *M1*	**STYLE NUMBER:** *M1*
SEASON: *2025*	**SIZE:** *OSFM*	**DATE:** *Aug 06, 2025*

STRUCTURED 5 PANEL POLY MICROFIBER HAT

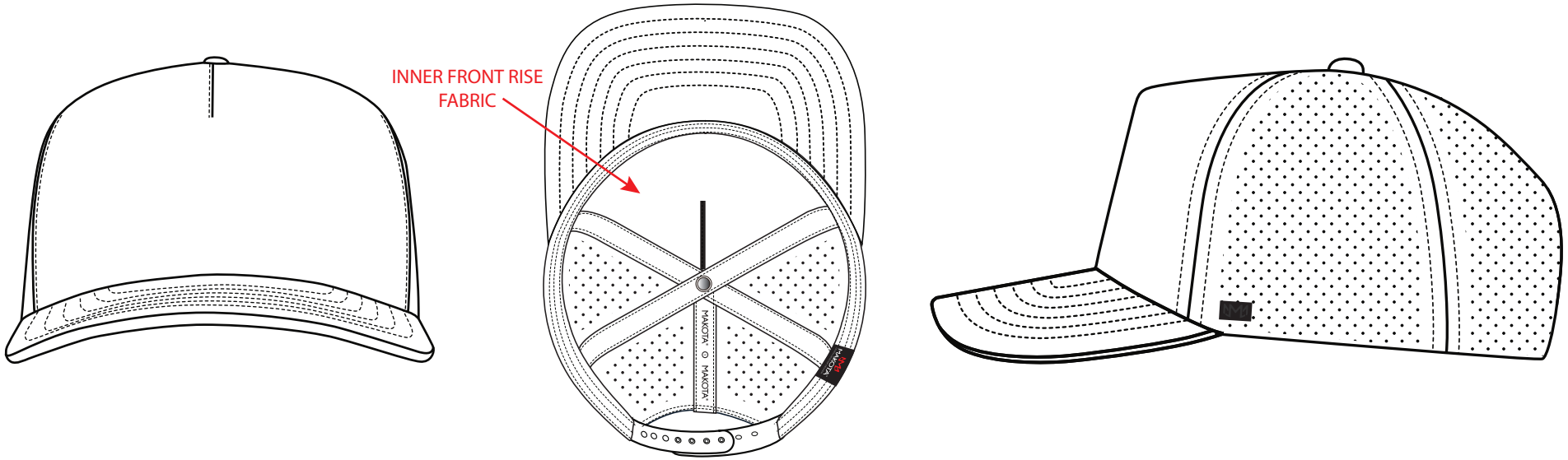

CONSTRUCTION DESCRIPTION:	**SHAPE/STYLE REFERENCE:** *M1 (SEE BELOW)*	
FRONT RISE: *POLY MICROFIBER w/ BUCKRAM BACKER + INNER FABRIC LINING*	**BILL SHAPE: SLIGHT CURVE**	
CROWN: *POLY MICROFIBER w 1mm LASER ETCHED HOLES*	**TRIMS DESCRIPTION:**	
BILL: *SLIGHTLY CURVED POLY MICROFIBER w/ 6 BILL STITCHES*	- *WOVEN FLAG LABEL* - *SILICONE BADGE* - *HEADBAND WOVEN LABEL* - *SEAM TAPE PRINT*	
UNDER BILL: *POLY MICROFIBER*		
BUTTON: *POLY MICROFIBER*		
HEADBAND: *BIRDS EYE - COOL DRY*		

MAKOTA CO. // ***ALL RIGHTS RESERVED**

TRIM

TRIM NAME: *MAKOTA WOVEN FLAG LABEL*

TRIM NUMBER: *MWFL-1*

COLORWAY: *BLACK / WHITE / RED-18-1564 TCX*

FINISHED SIZE: *2cm Width x 4.15cm Height*

WOVEN FLAG LABEL

TO SCALE

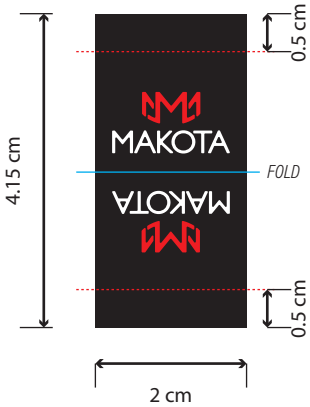

FINISHED SIZE

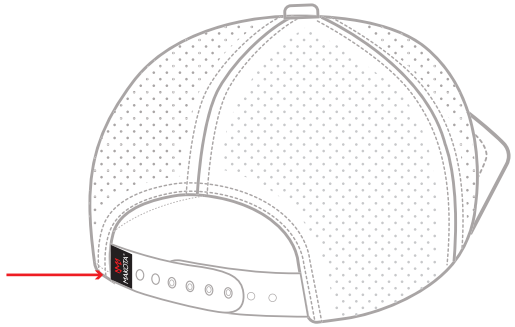

TRIM

TRIM NAME: *MAKOTA WOVEN HEADBAND LABEL*

TRIM NUMBER: *MWHL-1*

COLORWAY: *BLACK / WHITE / RED-18-1564 TCX*

FINISHED SIZE: *4cm Width x 6.5cm Height*

WOVEN HEADBAND LABEL

TO SCALE

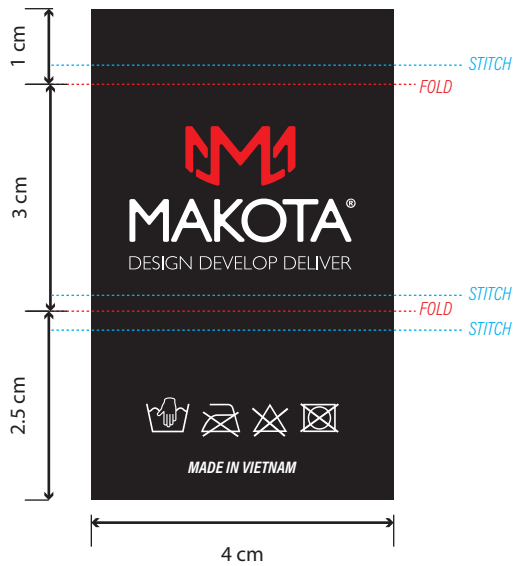

FINISHED SIZE

WOVEN LABEL WRAPS AROUND HEADBAND

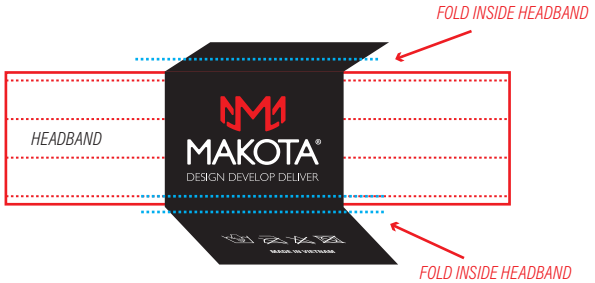

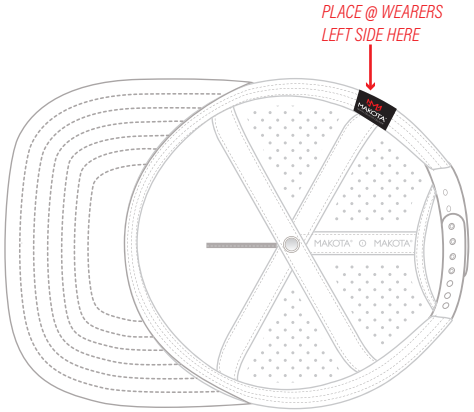

TRIM

TRIM NAME: MAKOTA SILICONE BRAND BADGE

TRIM NUMBER: MSBB-1

COLORWAY: BLACK ONYX 19-4003 TCX

FINISHED SIZE: 1.3cm Width x .82cm Height

TRIM NAME: SEAM TAPE PRINT

COLORWAY: POINCIANA 18-1564 TCX (TAPE) w/ BLACK ONYX 19-4003 TCX PRINT

FINISHED SIZE: 4cm Width x 6.5cm Height

SILICONE BADGE - WELDED (HEAT TRANSFER)

TO SCALE

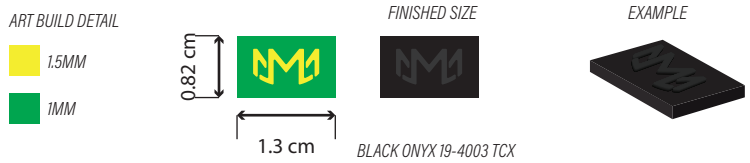

PLACE 1CM UP AND 1.5CM OVER FROM SEAMS
PLACE ON LEFT SIDE

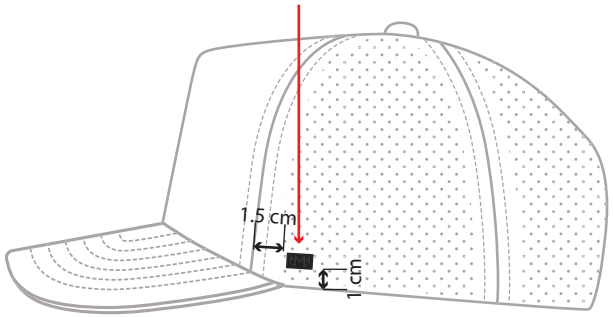

SEAM TAPE PRINT

TO SCALE

ART BUILD DETAIL

SEAM TAPE - POINCIANA 18-1564 TCX

PRINT - BLACK ONYX 19-4003 TCX

PLACE ON BACK SEAM TAPE ONLY
CENTER / CENTER

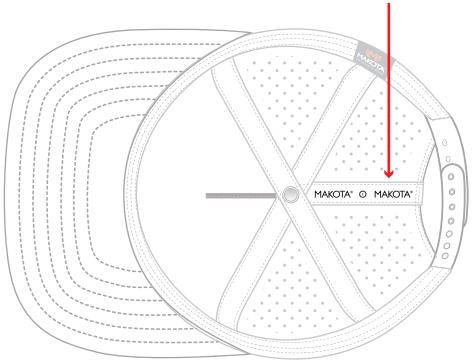

TRIM

TRIM NAME: *MAKOTA INNER FRONT RISE PRINT*

TRIM NUMBER: *MIFRP-1*

COLORWAY: *POINCIANA 18-1564 TCX*

REPEAT ART SIZE: *2.19cm Width x 2.45cm Height*

INNER FRONT RISE PRINT PATTERN

TO SCALE

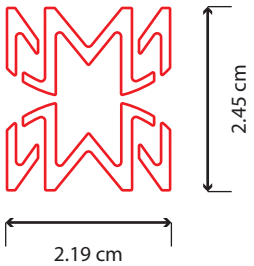

ART BUILD DETAIL

PATTERN PRINT - POINCIANA 18-1564 TCX

FABRIC - BLACK ONYX 19-4003 TCX

REPEAT PATTERN: 100% TO SCALE

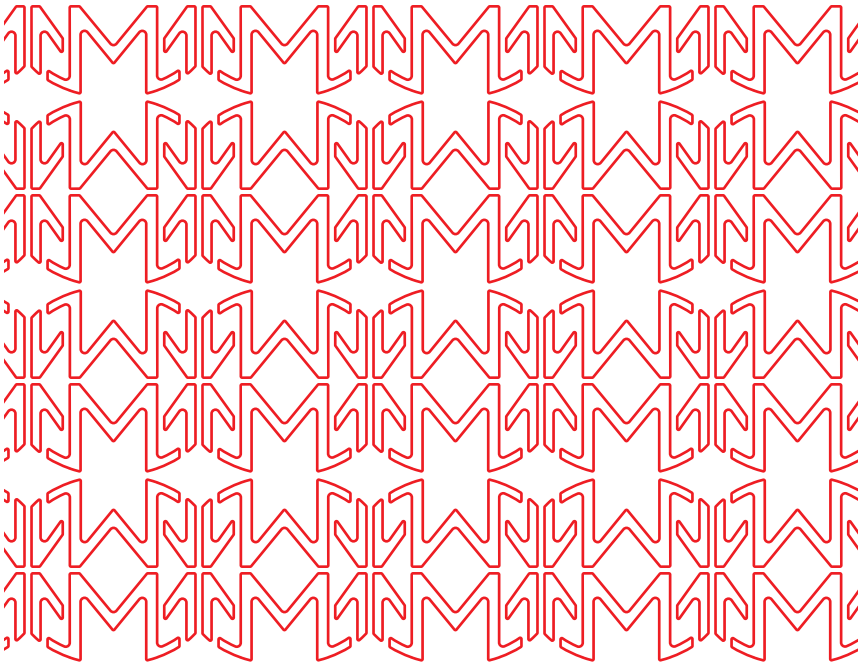

TRIM

TRIM NAME: MAKOTA PATCH

TRIM NUMBER: MP-1

COLORWAY: BLACK / POINCIANA 18-1564 TCX / WHITE

PATCH ART SIZE: 7.1cm Width x 4.1cm Height

SUEDE LABEL W/ SILICONE EMBOSSING

TO SCALE

PLACE 1.8CM UP FROM BILL EDGE

PATCH BUILD DETAIL

- 1MM HEIGHT SILICONE - POINCIANA 18-1564 TCX
- 1MM HEIGHT SILICONE - WHITE
- SUEDE MATERIAL - BLACK

STITCH w/ BLACK THREAD

SAMPLE IMAGE

MAKOTA CO. // *ALL RIGHTS RESERVED

BRAND: *MAKOTA*	**STYLE NAME:** *M1*	**STYLE NUMBER:** *M1*
SEASON: *2025*	**SIZE:** *OSFM*	**DATE:** *Aug 06, 2025*

STRUCTURED 5 PANEL POLY MICROFIBER HAT

COLORWAY #1

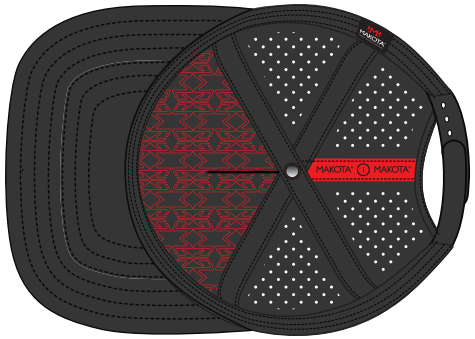

POLY MICROFIBER FRONT	BLACK ONYX 19-4003 TCX	**SNAP**	BLACK ONYX 19-4003 TCX
POLY MICROFIBER BACK	BLACK ONYX 19-4003 TCX	**FRONT RISE LOGO**	BLACK ONYX 19-4003 TCX
POLY MICROFIBER BILL	BLACK ONYX 19-4003 TCX	**THREAD**	BLACK ONYX 19-4003 TCX
POLY MICROFIBER UNDER BILL	BLACK ONYX 19-4003 TCX	**INNER FRONT FABRIC**	BLACK ONYX 19-4003 TCX
POLY MICROFIBER BUTTON	BLACK ONYX 19-4003 TCX	**BILL ROPE**	NONE
SEAM TAPE	BLACK ONYX 19-4003 TCX / BACK SEAM = POINCIANA 18-1564 TCX	**EYELETS**	NONE
HEADBAND - (COOL DRY FABRIC_	BLACK ONYX 19-4003 TCX		

MAKOTA CO. // ***ALL RIGHTS RESERVED**