BRAND: *MAKOTA*	**STYLE NAME:** *M2*	**STYLE NUMBER:** *M2*
SEASON: *2025*	**SIZE:** *OSFM*	**DATE:** *Aug 06, 2025*

STRUCTURED 5 PANEL POLY MICROFIBER HAT

59 CM @ 4 SNAPS

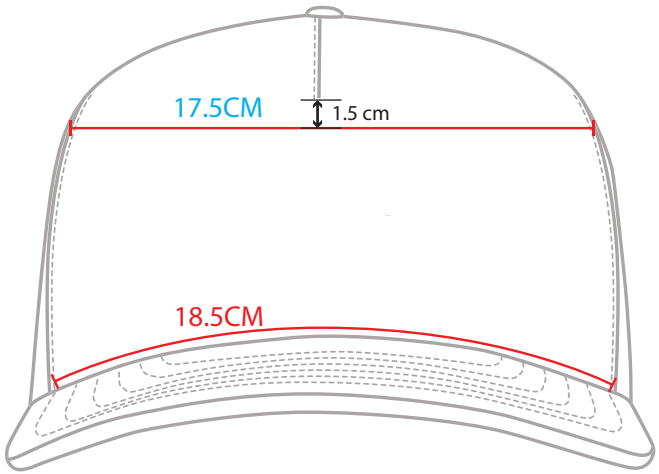

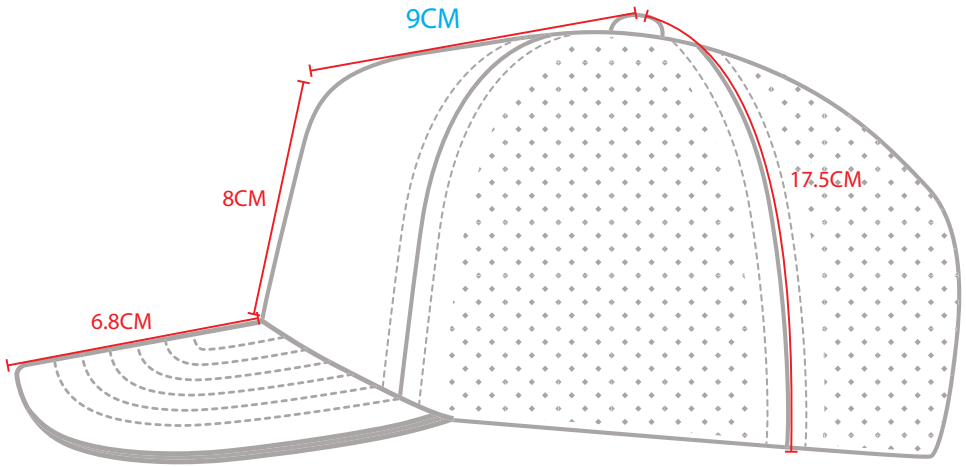

LOWER FRONT RISE WIDTH *= 18.5CM (+/- 3MM)*	***NOTES:***
UPPER FRONT RISE WIDTH (1.5CM DOWN FROM CENTER SEAM) *= 17.5CM (+/- 3MM)*	
FRONT RISE HEIGHT *= 8CM (+/- 3MM)*	
FRONT RISE DEPTH (TO CENTER BUTTON) *= 9CM (+/- 3MM)*	
BILL LENGTH *= 6.8CM (+/- 3MM)*	
CROWN DEPTH (TO CENTER BUTTON) *= 17.5CM (+/- 3MM)*	
CIRCUMFRENCE *= 59CM AT 4 SNAPS*	

MAKOTA CO. // ***ALL RIGHTS RESERVED**

BRAND: *MAKOTA*	**STYLE NAME:** *M2*	**STYLE NUMBER:** *M2*
SEASON: *2025*	**SIZE:** *OSFM*	**DATE:** *Aug 06, 2025*

STRUCTURED 5 PANEL POLY MICROFIBER HAT

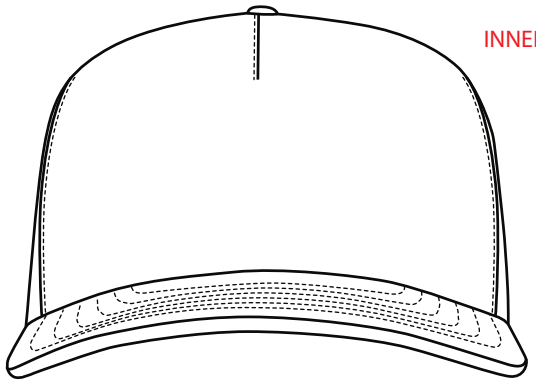

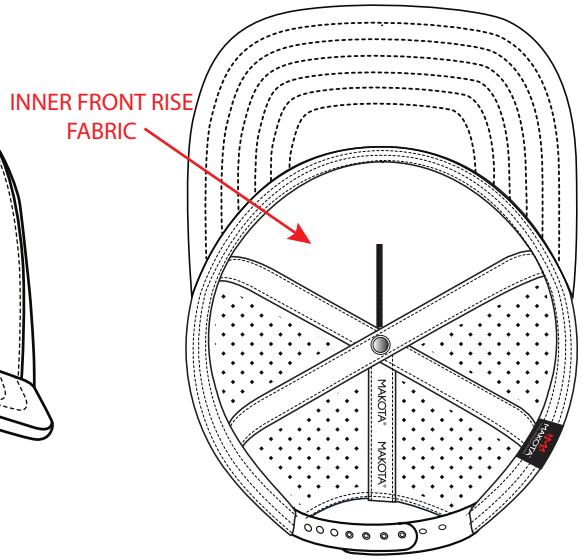

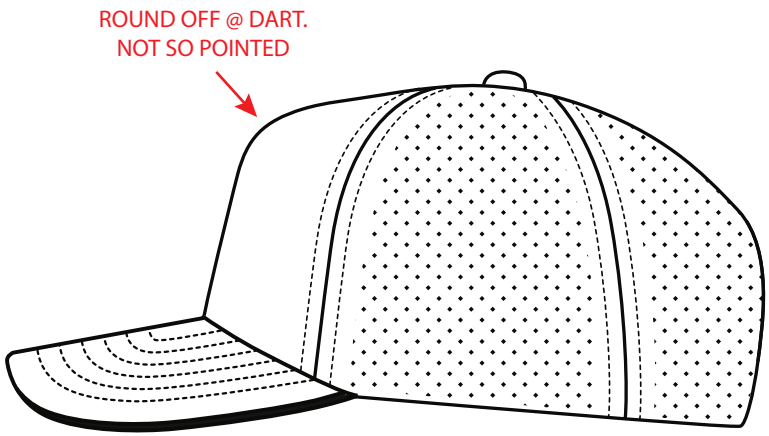

CONSTRUCTION DESCRIPTION:	**SHAPE/STYLE REFERENCE:** *M2 (SEE BELOW)*	
FRONT RISE: *POLY MICROFIBER w/ BUCKRAM BACKER + INNER FABRIC LINING*	**BILL SHAPE: SLIGHT CURVE**	
CROWN: *POLY MICROFIBER w 1mm LASER ETCHED HOLES*	**TRIMS DESCRIPTION:**	
BILL: *SLIGHTLY CURVED POLY MICROFIBER w/ 6 BILL STITCHES*	- *WOVEN FLAG LABEL* - *SILICONE BADGE* - *HEADBAND WOVEN LABEL* - *SEAM TAPE PRINT*	
UNDER BILL: *POLY MICROFIBER*		
BUTTON: *POLY MICROFIBER*		
HEADBAND: *BIRDS EYE - COOL DRY*		

MAKOTA CO. // ***ALL RIGHTS RESERVED**

TRIM

TRIM NAME: *MAKOTA WOVEN FLAG LABEL*

TRIM NUMBER: *MWFL-1*

COLORWAY: *BLACK / WHITE / RED-18-1564 TCX*

FINISHED SIZE: *2cm Width x 4.15cm Height*

WOVEN FLAG LABEL

TO SCALE

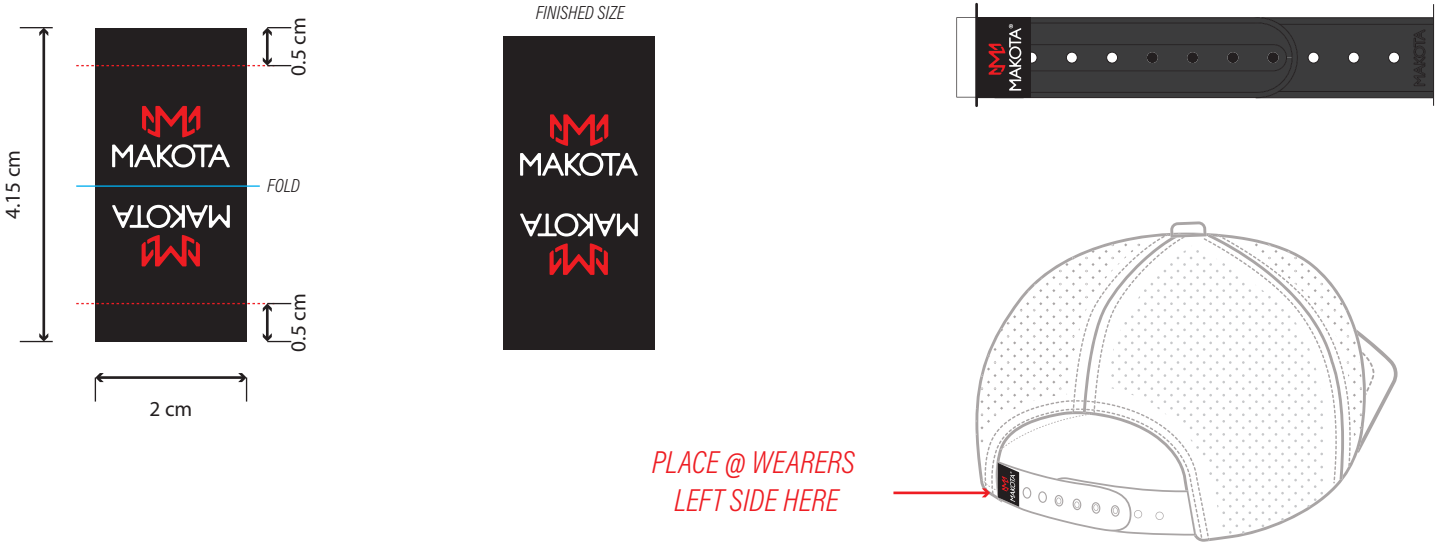

TRIM

TRIM NAME: *MAKOTA WOVEN HEADBAND LABEL*

TRIM NUMBER: *MWHL-1*

COLORWAY: *BLACK / WHITE / RED-18-1564 TCX*

FINISHED SIZE: *4cm Width x 6.5cm Height*

WOVEN HEADBAND LABEL

TO SCALE

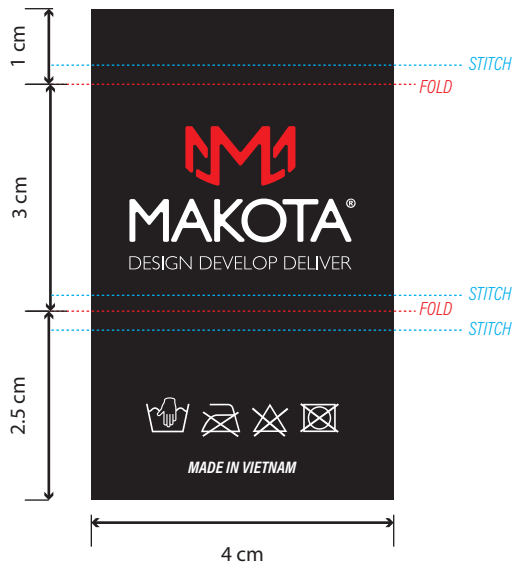

FINISHED SIZE

WOVEN LABEL WRAPS AROUND HEADBAND

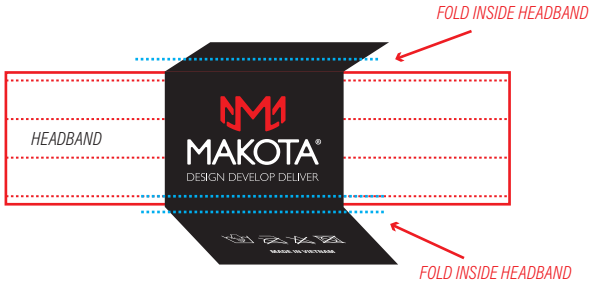

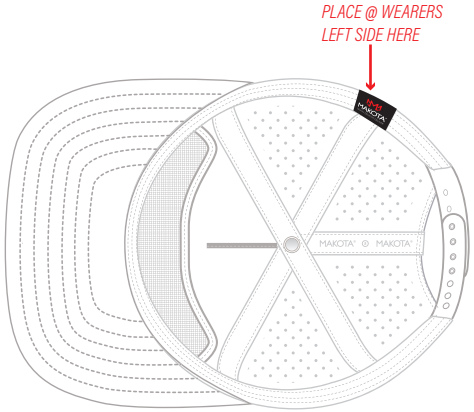

MAKOTA CO. // *ALL RIGHTS RESERVED

TRIM

TRIM NAME: *MAKOTA SILICONE BRAND BADGE*

TRIM NUMBER: *MSBB-1*

COLORWAY: *BLACK ONYX 19-4003 TCX*

FINISHED SIZE: *1.3cm Width x .82cm Height*

TRIM NAME: *SEAM TAPE PRINT*

COLORWAY: *POINCIANA 18-1564 TCX (TAPE) w/ BLACK ONYX 19-4003 TCX PRINT*

FINISHED SIZE: *4cm Width x 6.5cm Height*

SILICONE BADGE - WELDED (HEAT TRANSFER)

TO SCALE

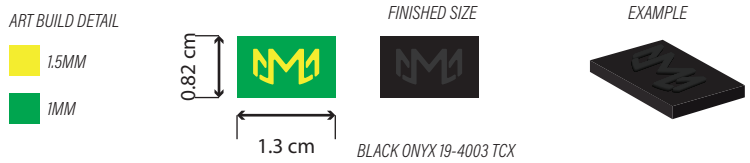

PLACE 1CM UP AND 1.5CM OVER FROM SEAMS
PLACE ON LEFT SIDE

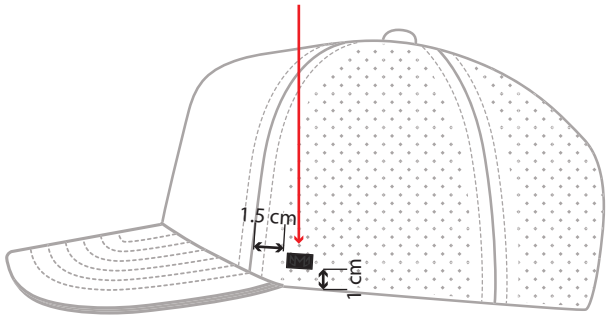

SEAM TAPE PRINT

TO SCALE

PLACE ON BACK SEAM TAPE ONLY
CENTER / CENTER

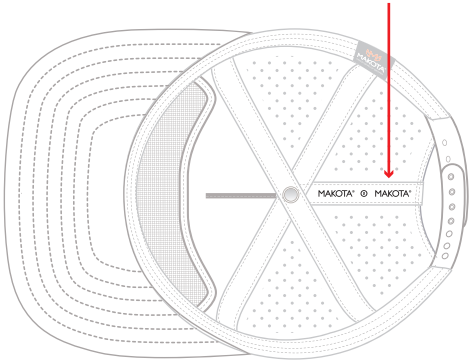

MAKOTA CO. // ***ALL RIGHTS RESERVED**

TRIM

TRIM NAME: *MAKOTA INNER FRONT RISE PRINT*

TRIM NUMBER: *MIFRP-1*

COLORWAY: *POINCIANA 18-1564 TCX*

REPEAT ART SIZE: *2.19cm Width x 2.45cm Height*

INNER FRONT RISE PRINT PATTERN

TO SCALE

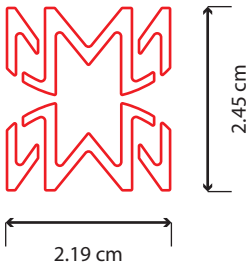

ART BUILD DETAIL

PATTERN PRINT - POINCIANA 18-1564 TCX

FABRIC - BLACK ONYX 19-4003 TCX

REPEAT PATTERN: 100% TO SCALE

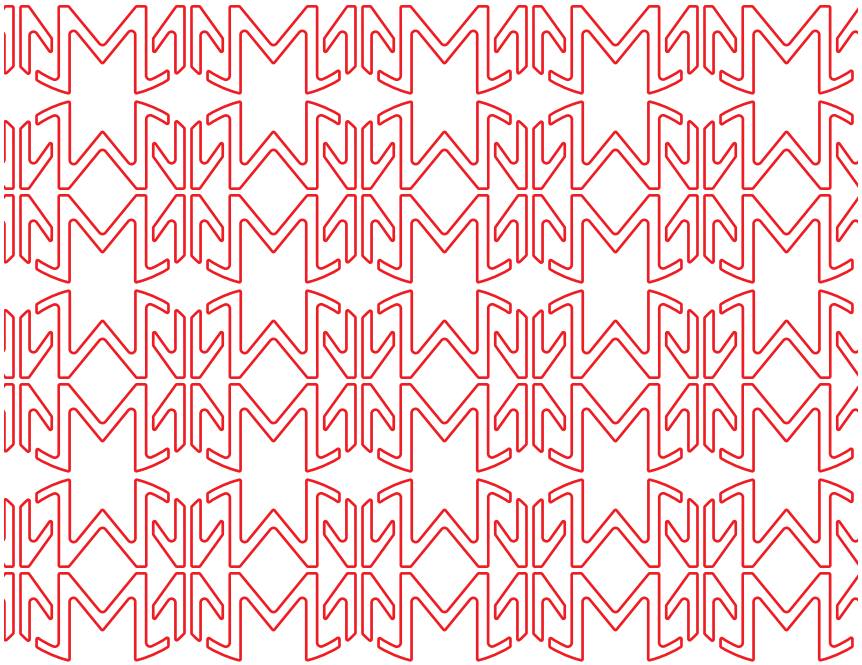

MAKOTA CO. // ***ALL RIGHTS RESERVED**

TRIM

TRIM NAME: *MAKOTA PATCH*

TRIM NUMBER: *MP-1*

COLORWAY: *BLACK / POINCIANA 18-1564 TCX / WHITE*

PATCH ART SIZE: *7.1cm Width x 4.1cm Height*

SUEDE LABEL W/ SILICONE EMBOSSING

TO SCALE

PATCH BUILD DETAIL

- *1MM HEIGHT SILICONE - POINCIANA 18-1564 TCX*
- *1MM HEIGHT SILICONE - WHITE*
- *SUEDE MATERIAL - BLACK*

STITCH w/ BLACK THREAD

PLACE 2CM UP FROM BILL EDGE

SAMPLE IMAGE

MAKOTA CO. // ***ALL RIGHTS RESERVED**

BRAND: *MAKOTA*	**STYLE NAME:** *M2*	**STYLE NUMBER:** *M2*
SEASON: *2025*	**SIZE:** *OSFM*	**DATE:** *Aug 06, 2025*

STRUCTURED 5 PANEL POLY MICROFIBER HAT

COLORWAY #1

POLY MICROFIBER FRONT	DT 11216 GREY	**SNAP**	BLACK ONYX 19-4003 TCX
POLY MICROFIBER BACK	DT 11216 GREY	**FRONT RISE LOGO**	MAKOTA LOGO PATCH
POLY MICROFIBER BILL	DT 11216 GREY	**THREAD**	TONAL
POLY MICROFIBER UNDER BILL	DT 11216 GREY	**INNER FRONT FABRIC**	BLACK
POLY MICROFIBER BUTTON	DT 11216 GREY	**BILL ROPE**	NONE
SEAM TAPE	BLACK ONYX 19-4003 TCX	**EYELETS**	NONE
HEADBAND - (COOL DRY FABRIC_	BLACK ONYX 19-4003 TCX	**FLIP UP MESH LINER**	BLACK ONYX 19-4003 TCX

MAKOTA CO. // ***ALL RIGHTS RESERVED**