BRAND: *MAKOTA*	**STYLE NAME:** *M9*	**STYLE NUMBER:** *M9*
SEASON: *2025*	**SIZE:** *OSFM*	**DATE:** *Aug 07, 2025*

STRUCTURED 6 PANEL POLY TWILL HAT

59 CM @ 4 SNAPS

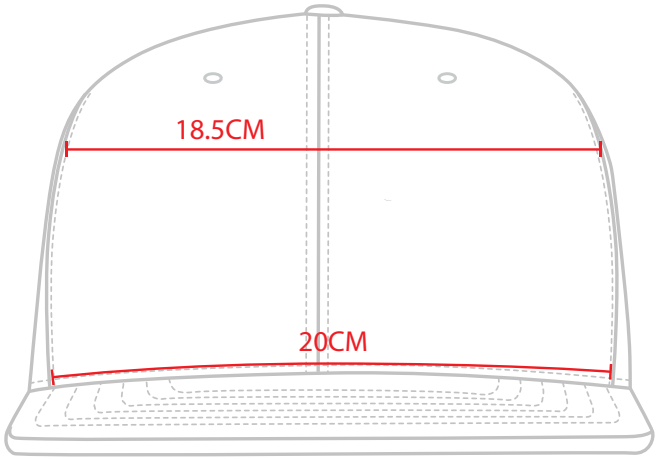

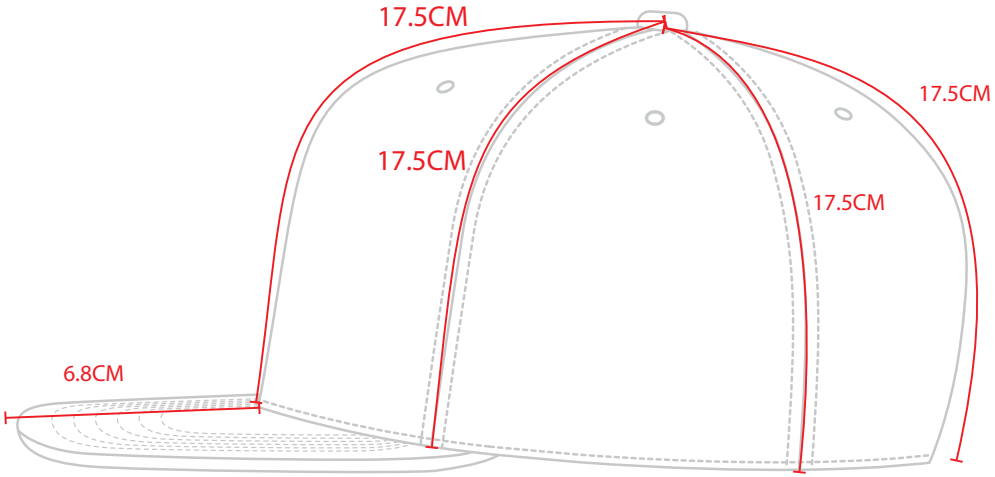

LOWER FRONT RISE WIDTH *= 20CM (+/- 3MM)*	**NOTES: BILL SHAPE**
UPPER FRONT RISE WIDTH (1.5CM DOWN FROM CENTER SEAM) *= 18.5CM (+/- 3MM)*	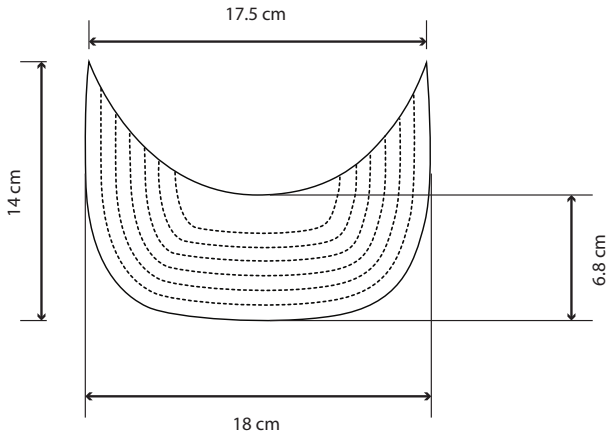
FRONT RISE HEIGHT / DEPTH *= 17.5CM (+/- 3MM)*	
FRONT RISE HEIGHT / DEPTH (TO CENTER BUTTON) *= 17.5CM (+/- 3MM)*	
BILL LENGTH *= 6.8CM (+/- 3MM)*	
CROWN DEPTH (TO CENTER BUTTON) *= 17.5CM (+/- 3MM)*	
CIRCUMFRENCE *= 59CM AT 4 SNAPS*	

MAKOTA CO. // ***ALL RIGHTS RESERVED**

BRAND: *MAKOTA*	**STYLE NAME:** *M9*	**STYLE NUMBER:** *M9*
SEASON: *2025*	**SIZE:** *OSFM*	**DATE:** *Aug 07, 2025*

STRUCTURED 6 PANEL POLY TWILL HAT

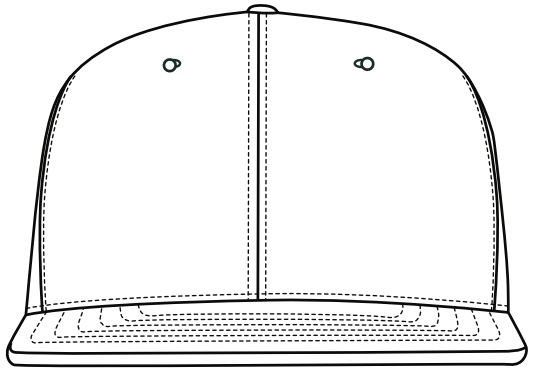

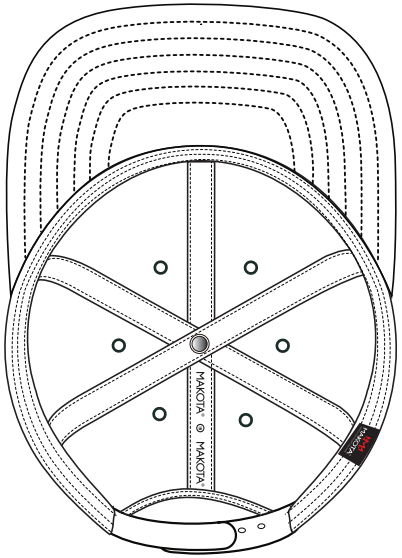

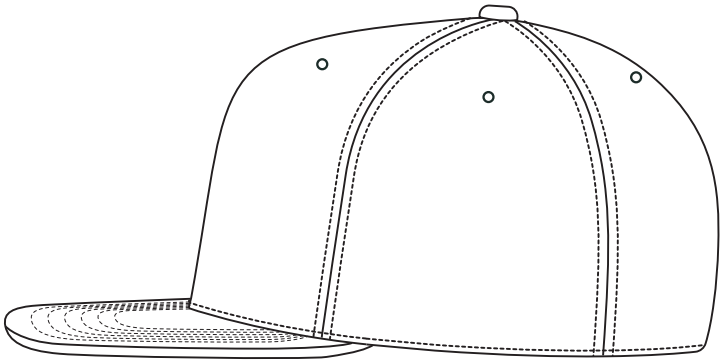

CONSTRUCTION DESCRIPTION:	**SHAPE/STYLE REFERENCE:** *M9 (SEE BELOW)*	
FRONT RISE: *POLY TWILL*	**BILL SHAPE:** *SLIGHTLY CURVED*	
CROWN: *POLY TWILL*	**TRIMS DESCRIPTION:**	
BILL: *SLIGHTLY CURVED POLY TWILL w/ 6 BILL STITCHES*	- *WOVEN FLAG LABEL* - *3D EMBROIDERY LOGO* - *HEADBAND WOVEN LABEL* - *SEAM TAPE PRINT*	
UNDER BILL: *POLY TWILL*		
BUTTON: *POLY TWILL*		
HEADBAND: *POLY TWILL*		9FIFTY NEW ERA HAT

MAKOTA CO. // ***ALL RIGHTS RESERVED**

TRIM

TRIM NAME: *MAKOTA WOVEN FLAG LABEL*

TRIM NUMBER: *MWFL-1*

COLORWAY: *BLACK / WHITE / RED-18-1564 TCX*

FINISHED SIZE: *2cm Width x 4.15cm Height*

WOVEN FLAG LABEL

TO SCALE

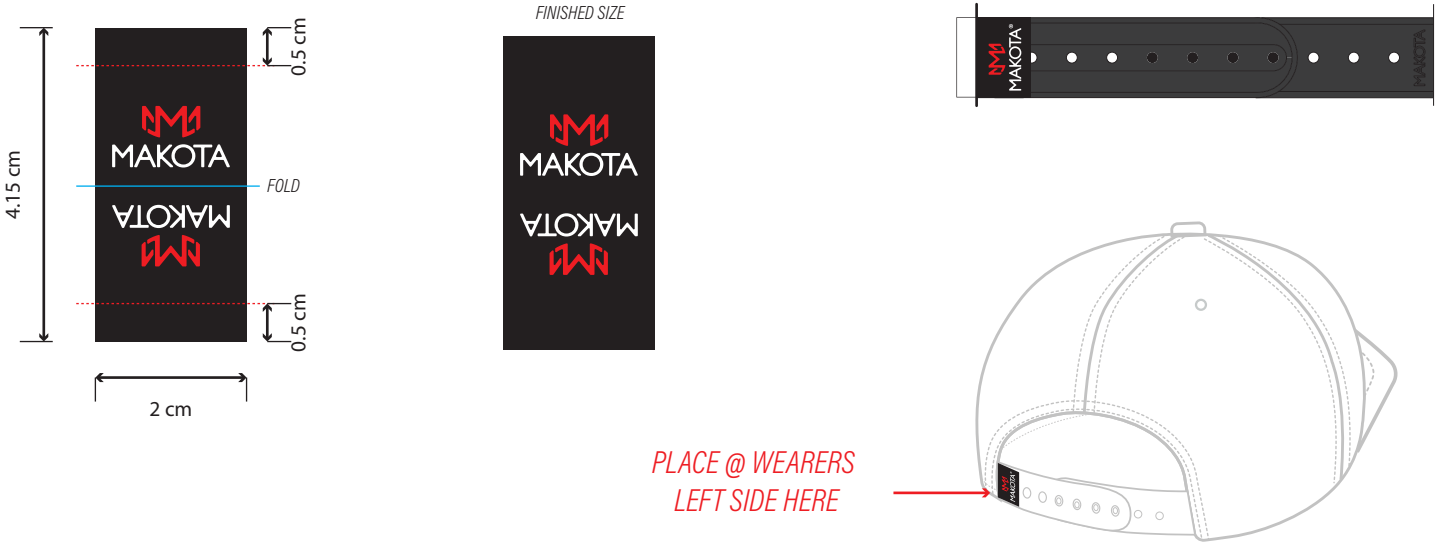

TRIM

TRIM NAME: *MAKOTA WOVEN HEADBAND LABEL*

TRIM NUMBER: *MWHL-1*

COLORWAY: *BLACK / WHITE / RED-18-1564 TCX*

FINISHED SIZE: *4cm Width x 6.5cm Height*

WOVEN HEADBAND LABEL

TO SCALE

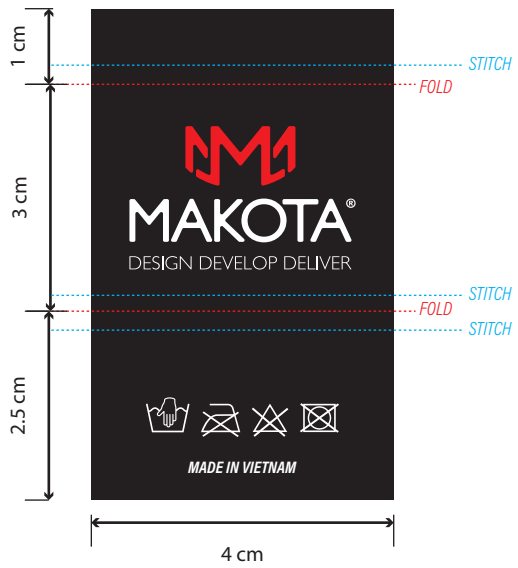

FINISHED SIZE

WOVEN LABEL WRAPS AROUND HEADBAND

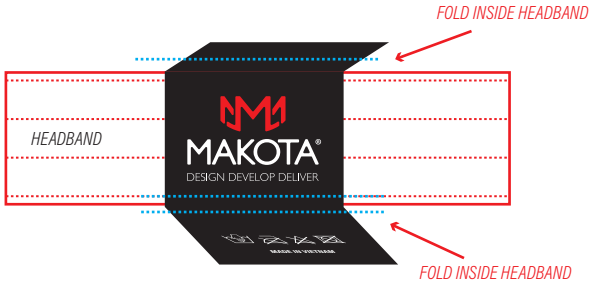

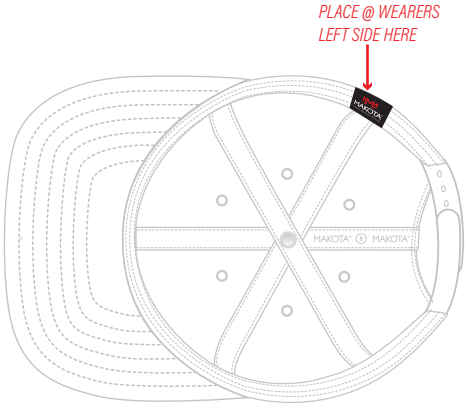

MAKOTA CO. // *ALL RIGHTS RESERVED

TRIM

TRIM NAME: (M) LOGO EMBROIDERY

COLORWAY: POINCINANA 181564 TCX / BLACK ONYX 19-4003 TCX

FINISHED SIZE: 2.5cm Width x 1.35cm Height

TRIM NAME: SEAM TAPE PRINT

COLORWAY: POINCIANA 18-1564 TCX (TAPE) w/ BLACK ONYX 19-4003 TCX PRINT

FINISHED SIZE: 4cm Width x 6.5cm Height

EMBROIDERY

TO SCALE

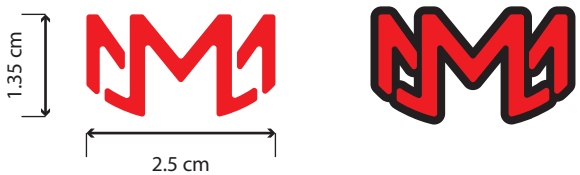

ART BUILD DETAIL

- POINCIANA 18-1564 TCX
- GROUND BLACK ONYX 19-4003 TCX

PLACE 1CM UP AND 1.5CM OVER FROM SEAMS
PLACE ON LEFT SIDE

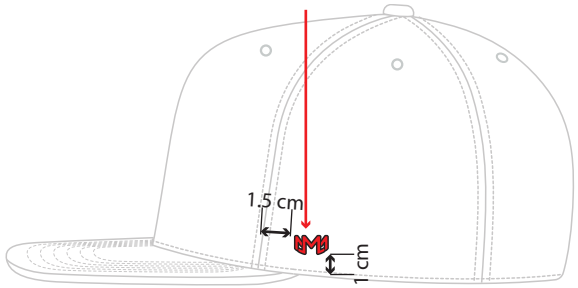

SEAM TAPE PRINT

TO SCALE

ART BUILD DETAIL

- SEAM TAPE - POINCIANA 18-1564 TCX
- PRINT - BLACK ONYX 19-4003 TCX

PLACE ON BACK SEAM TAPE ONLY
CENTER / CENTER

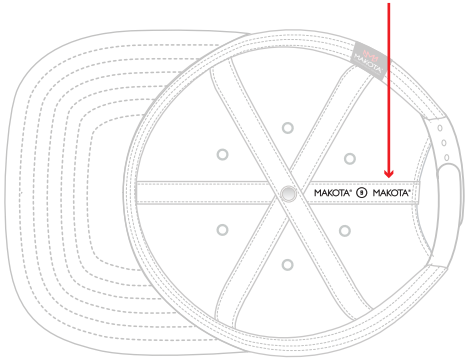

MAKOTA CO. // *ALL RIGHTS RESERVED

TRIM

TRIM NAME: MAKOTA PATCH

TRIM NUMBER: MP-1

COLORWAY: BLACK / POINCIANA 18-1564 TCX / WHITE

PATCH ART SIZE: 2.19cm Width x 2.45cm Height

EMBROIDERY PATCH

TO SCALE

PLACE 1.5CM UP FROM BILL EDGE

PATCH BUILD DETAIL

- LOGO EMBROIDERY- POINCIANA 18-1564 TCX
- LOGO EMBROIDERY - WHITE
- EMBROIDERY EDGE - BLACK ONYX 19-4003 TCX
- FABRIC - BLACK ONYX 19-4003 TCX

MAKOTA CO. // *ALL RIGHTS RESERVED

BRAND: *MAKOTA*	**STYLE NAME:** *M9*	**STYLE NUMBER:** *M9*
SEASON: *2025*	**SIZE:** *OSFM*	**DATE:** *Aug 07, 2025*

STRUCTURED 6 PANEL POLY TWILL HAT

COLORWAY #1

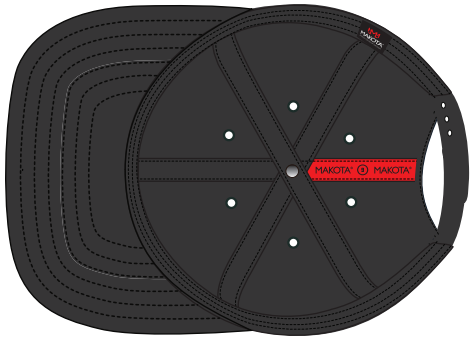

POLY TWILL FRONT	BLACK	**SNAP**	BLACK
POLY TWILL BACK	BLACK	**FRONT RISE LOGO**	MAKOTA PATCH
POLY TWILL BILL	BLACK	**THREAD**	BLACK
POLY TWILL UNDER BILL	BLACK	**INNER FRONT FABRIC**	NONE
POLY TWILL BUTTON	BLACK	**BILL ROPE**	NONE
SEAM TAPE	BLACK	**EYELETS**	TONAL
HEADBAND - POLY TWILL	BLACK	**FLIP UP MESH LINER**	NONE

MAKOTA CO. // ***ALL RIGHTS RESERVED**