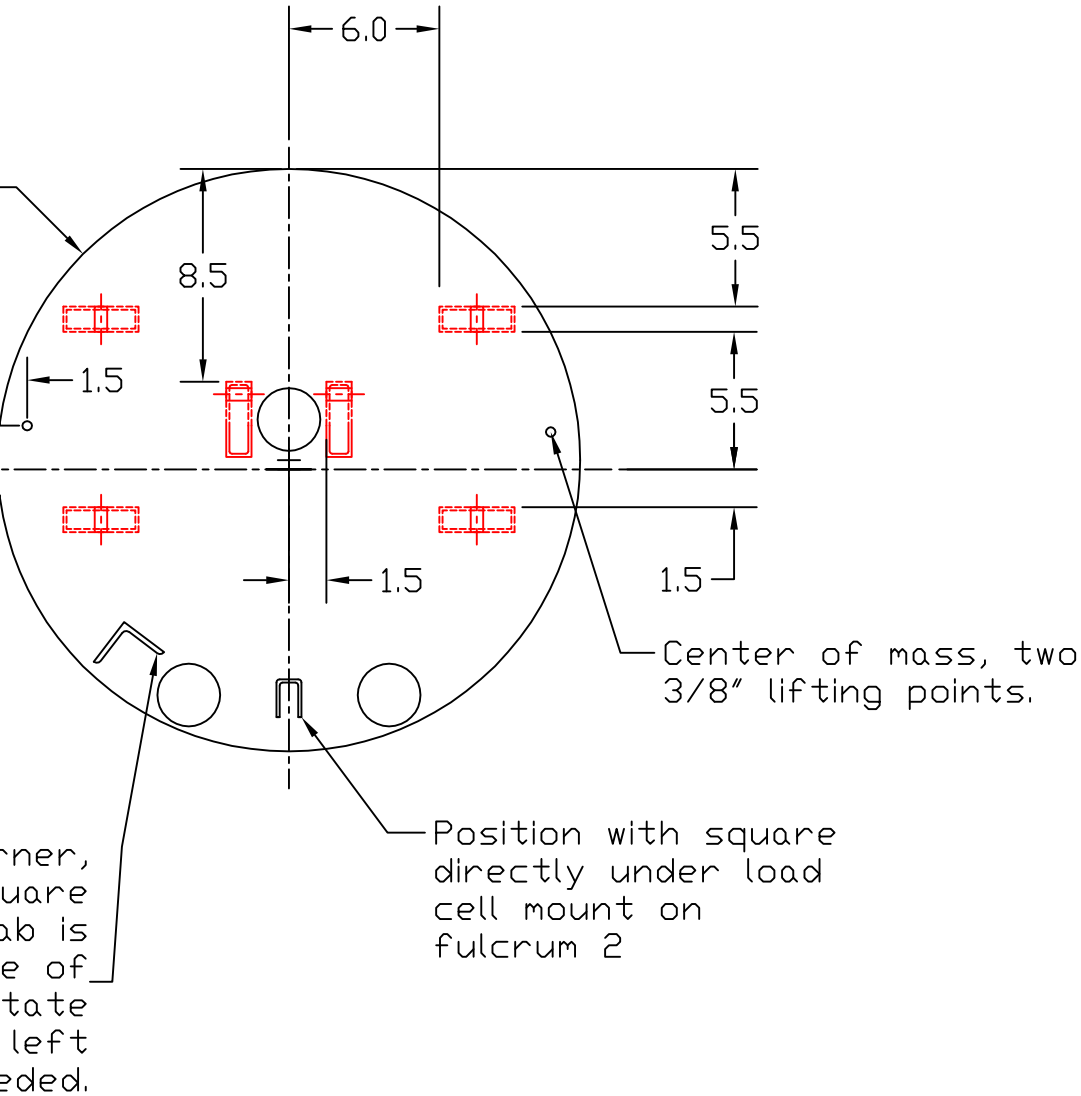
6.0
8.5
5.5
5.5
1.5
1.5
1.5
Center of mass, two
3/8″ lifting points.
Position with square
directly under load
cell mount on
fulcrum 2
rner,
uare
ab is
e of
tate
left
eded.

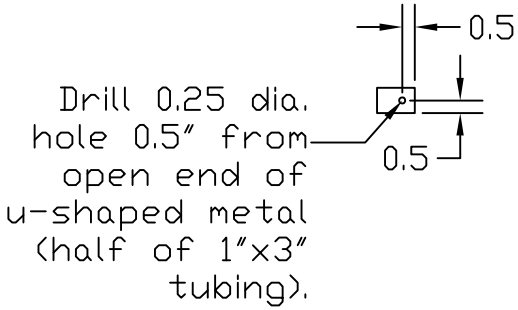
0.5
0.5
Drill 0.25 dia.
hole 0.5″ from
open end of
u-shaped metal
(half of 1″x3″
tubing).