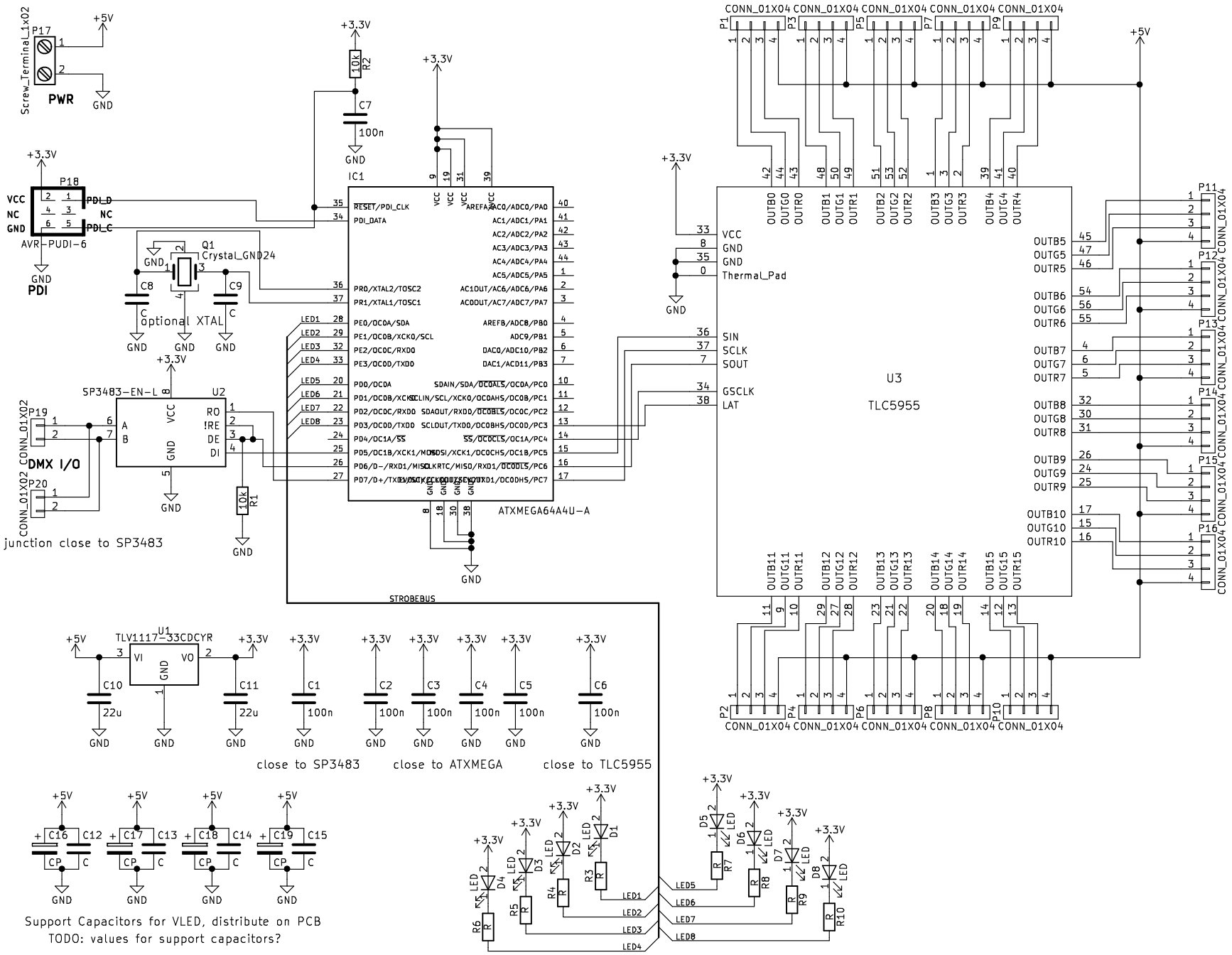
Screw_Terminal_1x02
P17
PWR
+5V
GND
+3.3V
R2
10k
C7
100n
IC1
ATXMEGA64A4U-A
P18
AVR-PUDI-6
PDI
PDI_D
PDI_C
NC
VCC
GND
Q1
Crystal_GND24
C8
C9
optional XTAL
SP3483-EN-L
U2
P19
P20
CONN_01X02
DMX I/O
junction close to SP3483
R1
10k
STROBEBUS
U1
TLV1117-33CDCYR
C10
22u
C11
22u
C1
100n
C2
100n
C3
100n
C4
100n
C5
100n
C6
100n
close to SP3483
close to ATXMEGA
close to TLC5955
U3
TLC5955
Thermal_Pad
SIN
SCLK
SOUT
GSCLK
LAT
CONN_01X04
P1
P2
P3
P4
P5
P6
P7
P8
P9
P10
P11
P12
P13
P14
P15
P16
C16
C17
C18
C19
C12
C13
C14
C15
Support Capacitors for VLED, distribute on PCB
TODO: values for support capacitors?
LED1
LED2
LED3
LED4
LED5
LED6
LED7
LED8
D1
D2
D3
D4
D5
D6
D7
D8
R3
R4
R5
R6
R7
R8
R9
R10