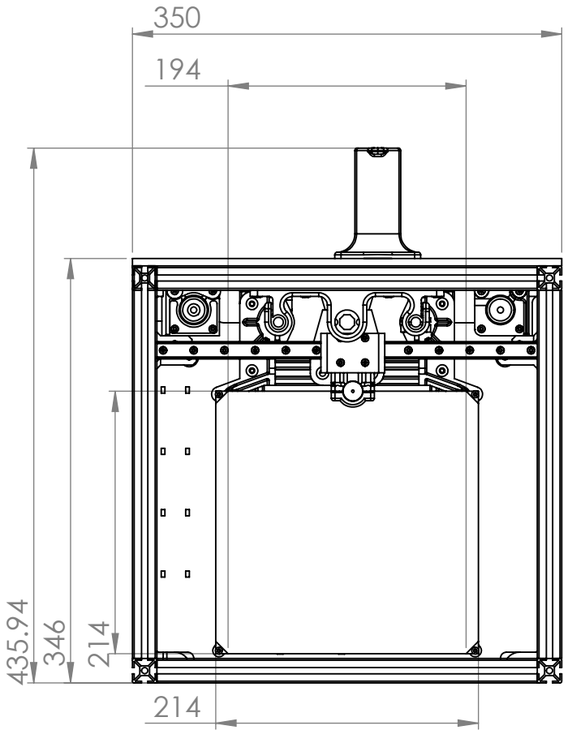

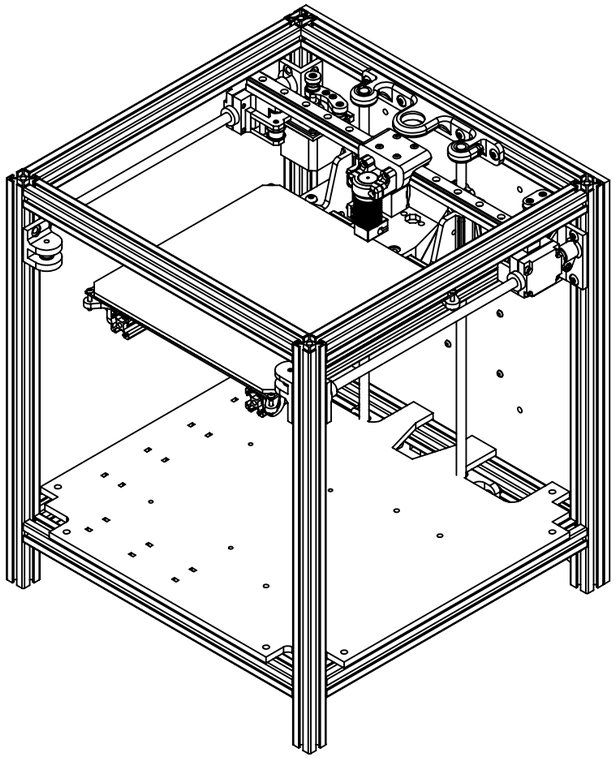

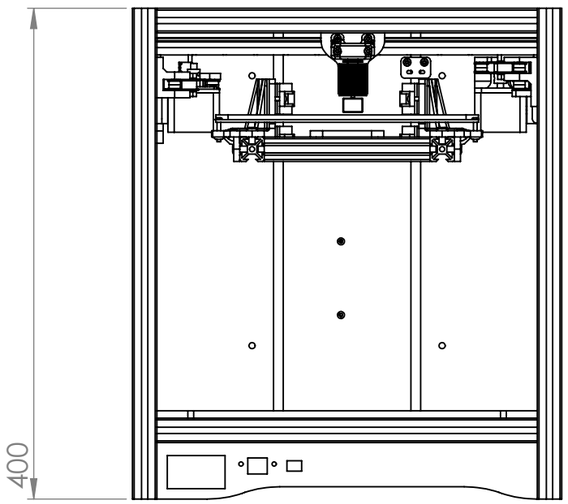

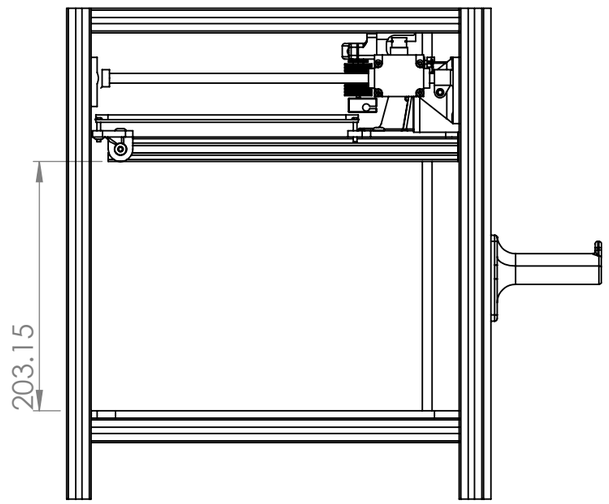

ITEM NO.	PART NUMBER	DESCRIPTION	QTY.
1	Frame New		1
2	Left Motor Assembly		1
3	Left Idler Assembly		1
4	Right Idler Assembly		1
5	steel rod 8x300		2
6	mg9 2		2
7	Left Axis Carrier Assembly		1
8	Axis Assembly		1
9	drawing of corexy		1
10	Right Axis Carrier Assembly		1
11	m3x8 button		10
12	Base Plate		1
13	Printer Back Plate		1
14	X Carriage Assembly		1
15	Z Endstop		1
16	Build Plate Assembly		1
17	Z Rail		1
18	Assem1		1
19	Spool Holder		1

UNLESS OTHERWISE SPECIFIED:
DIMENSIONS ARE IN MILLIMETERS
TOLERANCES:
LINEAR: 0.1mm
ANGULAR:

FINISH:

DEBURR AND BREAK SHARP EDGES

DO NOT SCALE DRAWING

REVISION

	NAME	SIGNATURE	DATE
DRAWN	Michael Morris		11/07/19
CHK'D			
APPV'D			
MFG			
Q.A			

Description:
Top level assembly of COREXY 3D printer
All non standard components 3D printed or machined
Full BOM and part models available at https://github.com/M-Morris-95/3D-printer

MATERIAL:

WEIGHT:

DWG NO.

CoreXY Printer

A3

SCALE:1:5

SHEET 1 OF 1