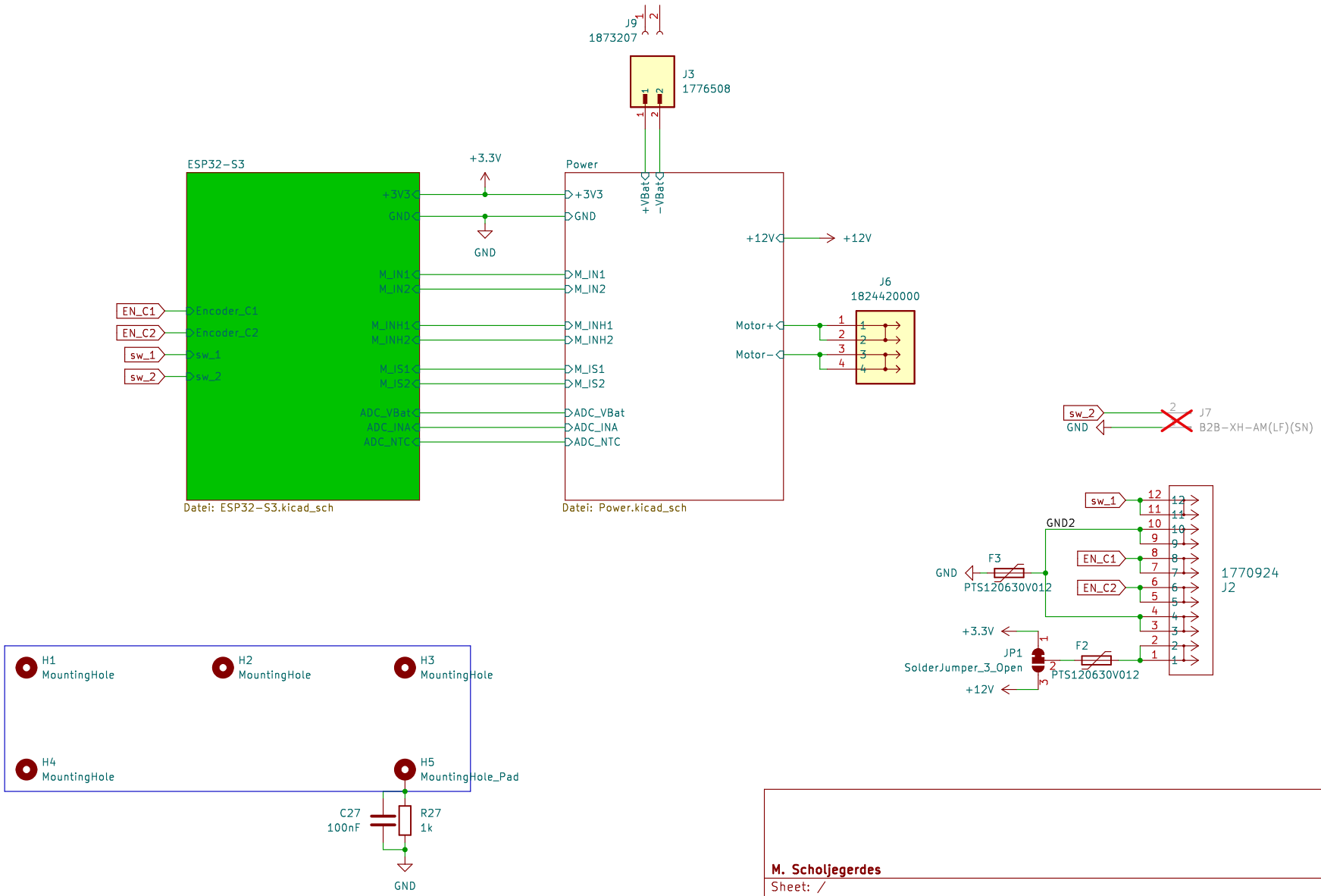

M. Scholjegerdes

Sheet: /

File: BugWiperPCB.kicad_sch

Title: BugWiper 2.0 Controller PCB

Size: A4	Date: 2025-01-27	**Rev:**
KiCad E.D.A. kicad 7.0.10		Id: 1/3

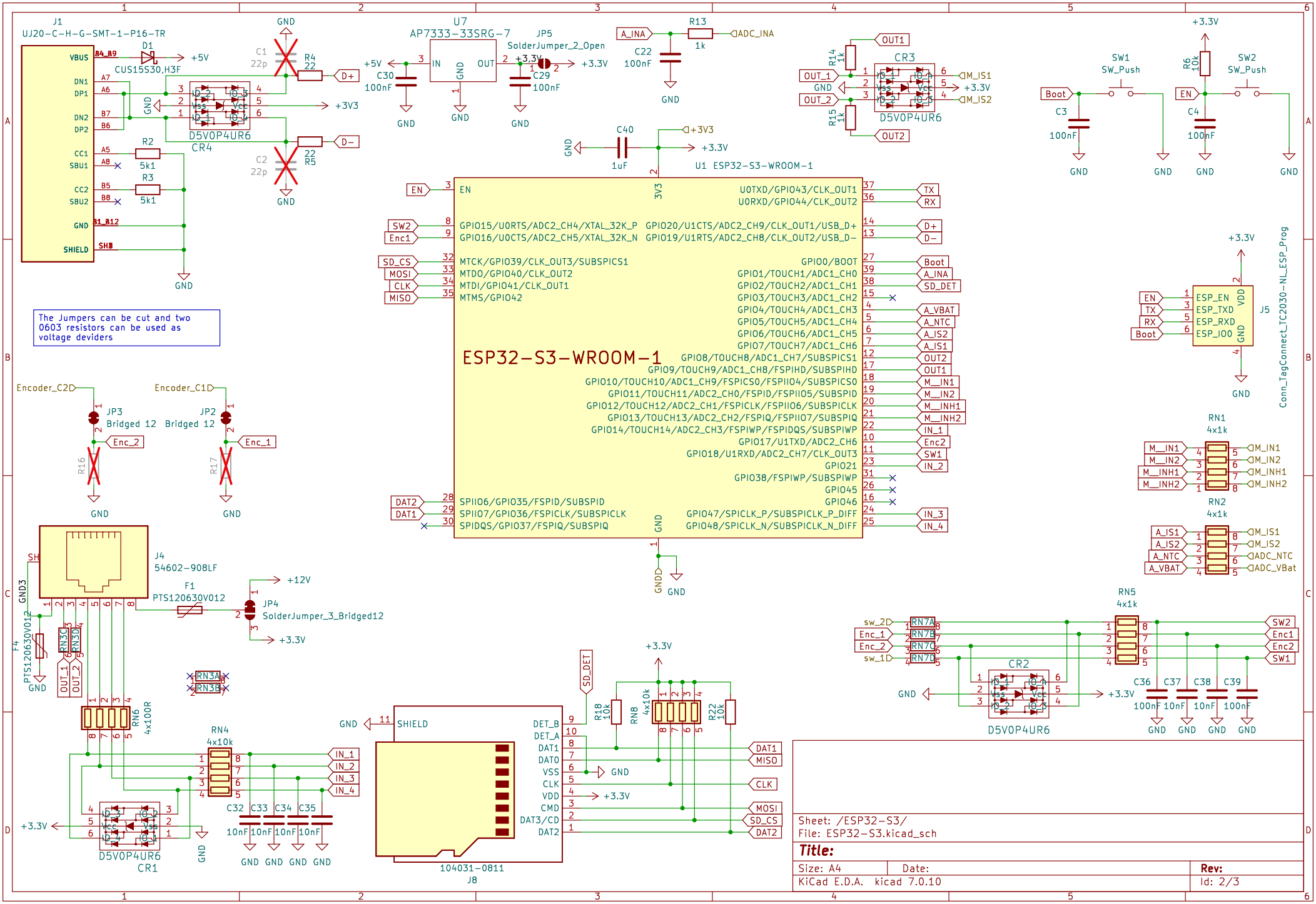

Sheet: /ESP32-S3/
File: ESP32-S3.kicad_sch

Title:

Size: A4	Date:	Rev:
KiCad E.D.A. kicad 7.0.10		Id: 2/3

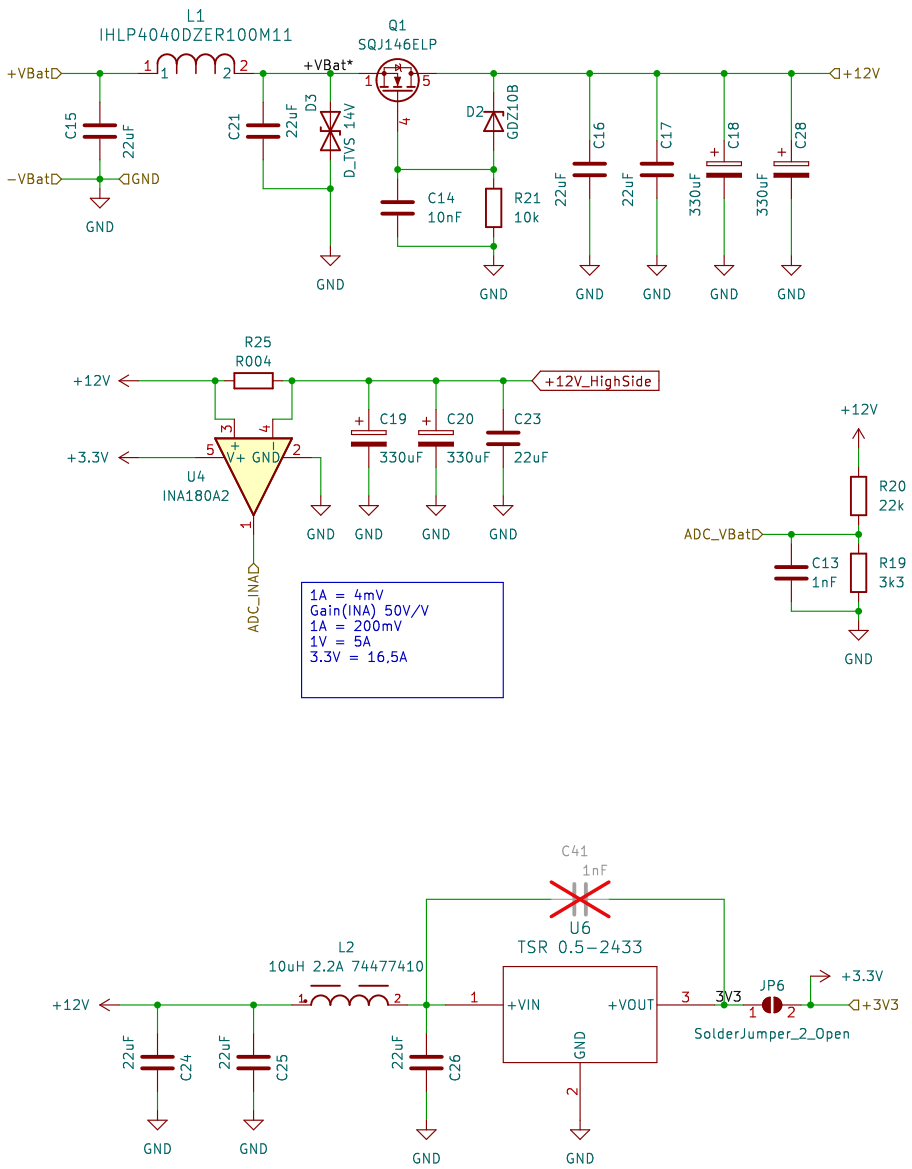

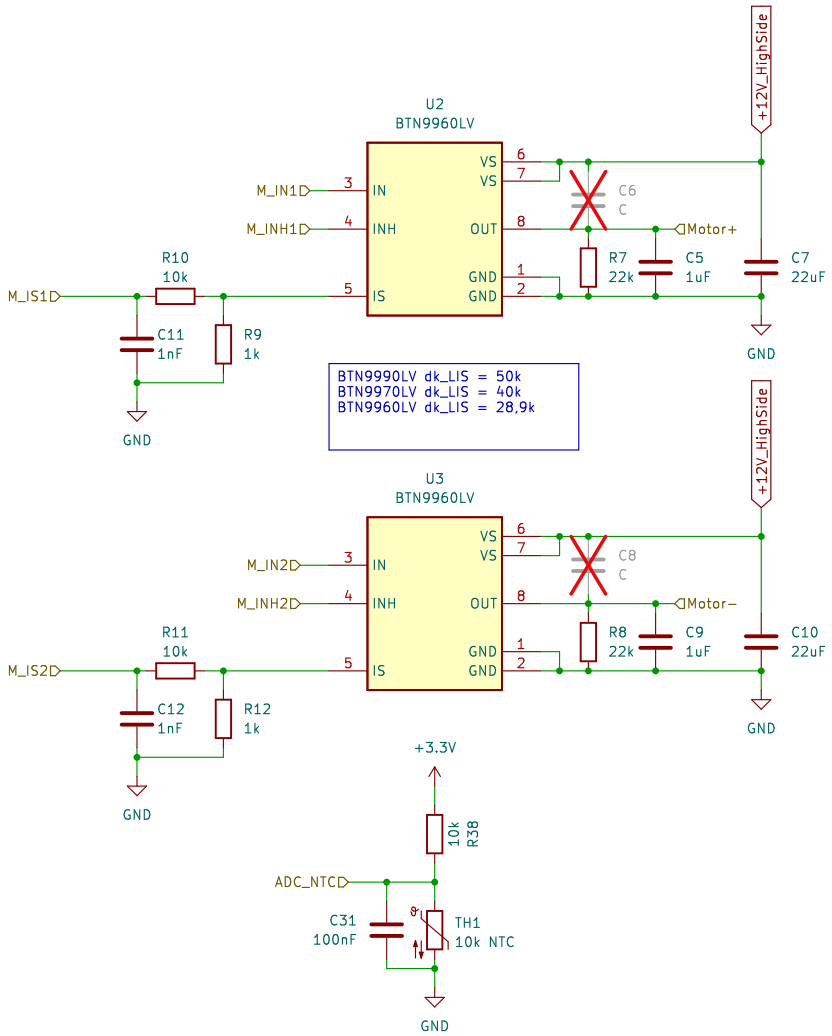

Sheet: /Power/
File: Power.kicad_sch

Title:

Size: A4	Date:	Rev:
KiCad E.D.A. kicad 7.0.10		Id: 3/3