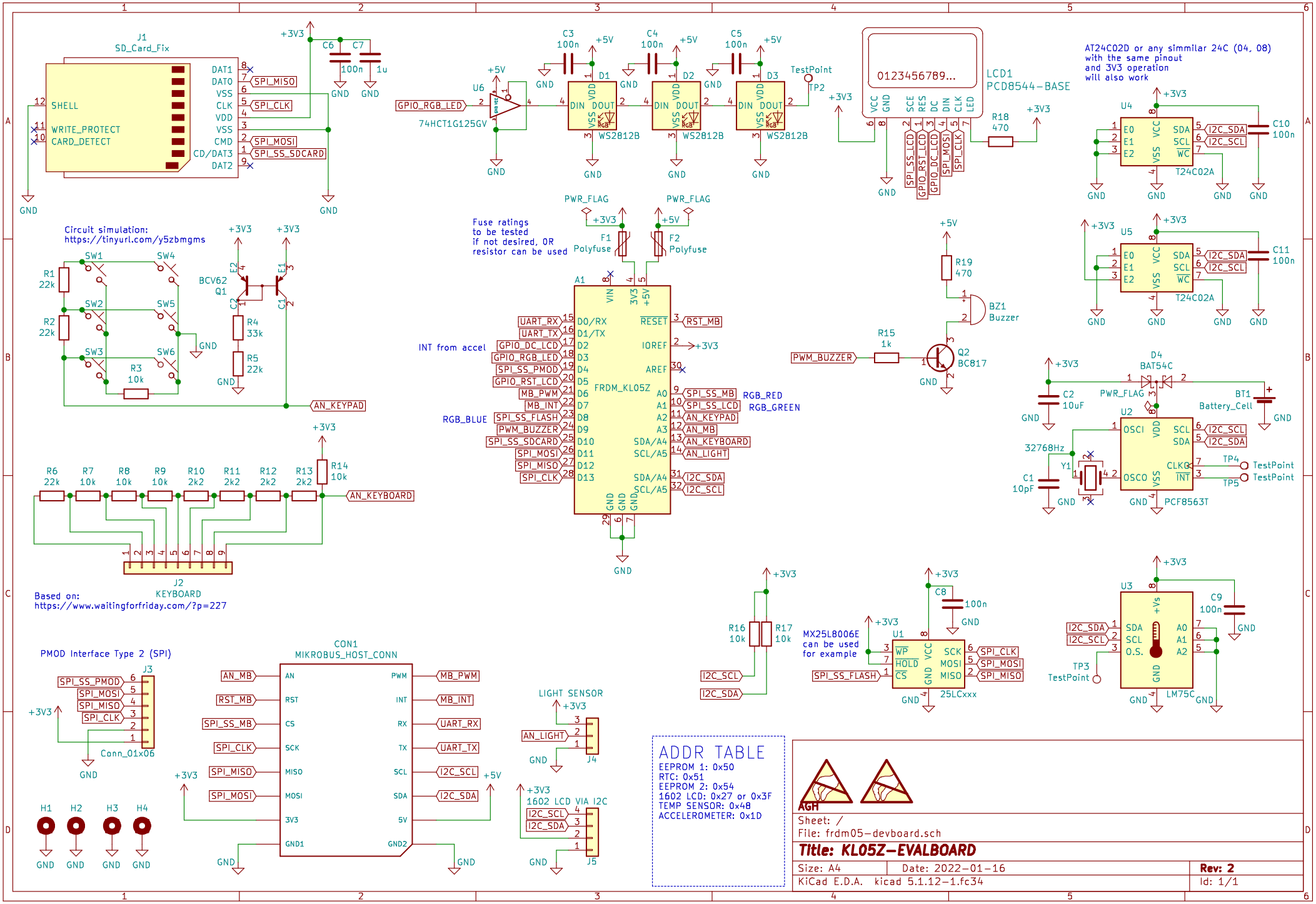
J1
SD_Card_Fix
SHELL
WRITE_PROTECT
CARD_DETECT
DAT1
DAT0
VSS
CLK
VDD
VSS
CMD
CD/DAT3
DAT2
SPI_MISO
SPI_CLK
SPI_MOSI
SPI_SS_SDCARD
C6 100n
C7 1u
GND
+3V3
U6
74HCT1G125GV
GPIO_RGB_LED
C3 100n
C4 100n
C5 100n
+5V
D1
D2
D3
DIN DOUT
VDD VSS
WS2812B
TestPoint
TP2
LCD1
PCD8544-BASE
0123456789...
VCC GND SCE RES DC DIN CLK LED
SPI_SS_LCD
GPIO_RST_LCD
GPIO_DC_LCD
SPI_MOSI
SPI_CLK
R18 470
AT24C02D or any simmilar 24C (04, 08)
with the same pinout
and 3V3 operation
will also work
U4
U5
E0 E1 E2 VSS VCC SDA SCL WC
I2C_SDA
I2C_SCL
C10 100n
C11 100n
T24C02A
Circuit simulation:
https://tinyurl.com/y5zbmgms
SW1
SW2
SW3
SW4
SW5
SW6
R1 22k
R2 22k
R3 10k
BCV62
Q1
R4 33k
R5 22k
AN_KEYPAD
PWR_FLAG
Fuse ratings
to be tested
if not desired, OR
resistor can be used
F1 Polyfuse
F2 Polyfuse
A1
FRDM_KL05Z
VIN 3V3 +5V
RESET
IOREF
AREF
D0/RX
D1/TX
D2
D3
D4
D5
D6
D7
D8
D9
D10
D11
D12
D13
A0
A1
A2
A3
SDA/A4
SCL/A5
GND GND GND
UART_RX
UART_TX
GPIO_DC_LCD
GPIO_RGB_LED
SPI_SS_PMOD
GPIO_RST_LCD
MB_PWM
MB_INT
SPI_SS_FLASH
PWM_BUZZER
SPI_SS_SDCARD
SPI_MOSI
SPI_MISO
SPI_CLK
RST_MB
SPI_SS_MB
SPI_SS_LCD
AN_KEYPAD
AN_MB
AN_KEYBOARD
AN_LIGHT
I2C_SDA
I2C_SCL
INT from accel
RGB_BLUE
RGB_RED
RGB_GREEN
R19 470
BZ1
Buzzer
R15 1k
Q2
BC817
PWM_BUZZER
D4
BAT54C
C2 10uF
BT1
Battery_Cell
U2
PCF8563T
OSCI OSCO VDD VSS SCL SDA CLKO INT
32768Hz
Y1
C1 10pF
TP4
TP5
TestPoint
R6 22k
R7 10k
R8 10k
R9 10k
R10 2k2
R11 2k2
R12 2k2
R13 2k2
R14 10k
J2
KEYBOARD
Based on:
https://www.waitingforfriday.com/?p=227
R16 10k
R17 10k
MX25LB006E
can be used
for example
U1
25LCxxx
WP HOLD CS GND VCC SCK MOSI MISO
C8 100n
U3
LM75C
SDA SCL O.S. +Vs GND A0 A1 A2
C9 100n
TP3
PMOD Interface Type 2 (SPI)
J3
Conn_01x06
CON1
MIKROBUS_HOST_CONN
AN RST CS SCK MISO MOSI 3V3 GND1
PWM INT RX TX SCL SDA 5V GND2
LIGHT SENSOR
J4
1602 LCD VIA I2C
J5
H1 H2 H3 H4
ADDR TABLE
EEPROM 1: 0x50
RTC: 0x51
EEPROM 2: 0x54
1602 LCD: 0x27 or 0x3F
TEMP SENSOR: 0x48
ACCELEROMETER: 0x1D
AGH
Sheet: /
File: frdm05-devboard.sch
Title: KL05Z-EVALBOARD
Size: A4
Date: 2022-01-16
Rev: 2
KiCad E.D.A. kicad 5.1.12-1.fc34
Id: 1/1