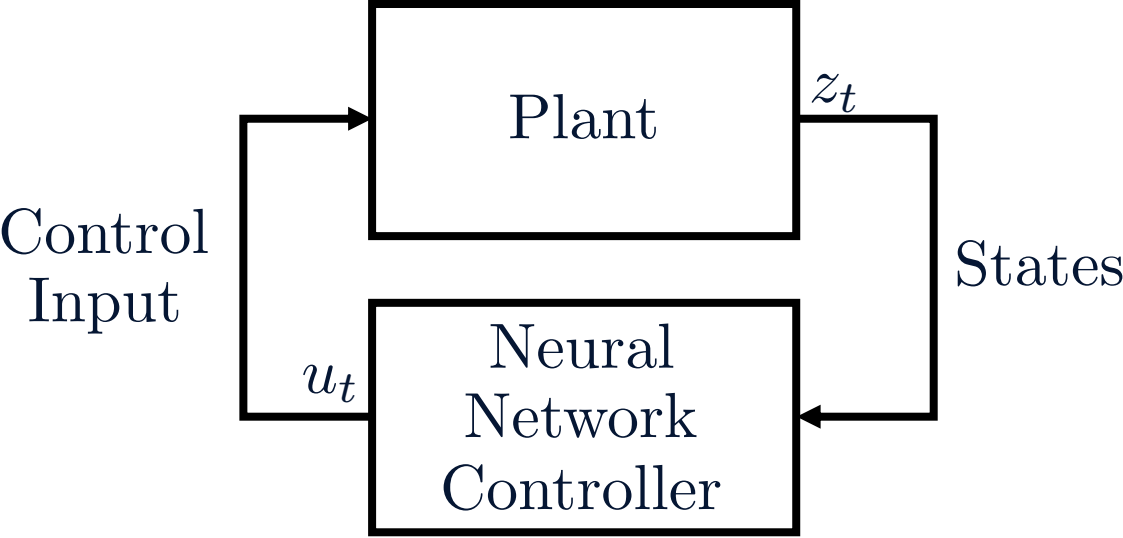
Plant
z_t
Control Input
States
u_t
Neural Network Controller

$$u_t = \pi(z_t)$$