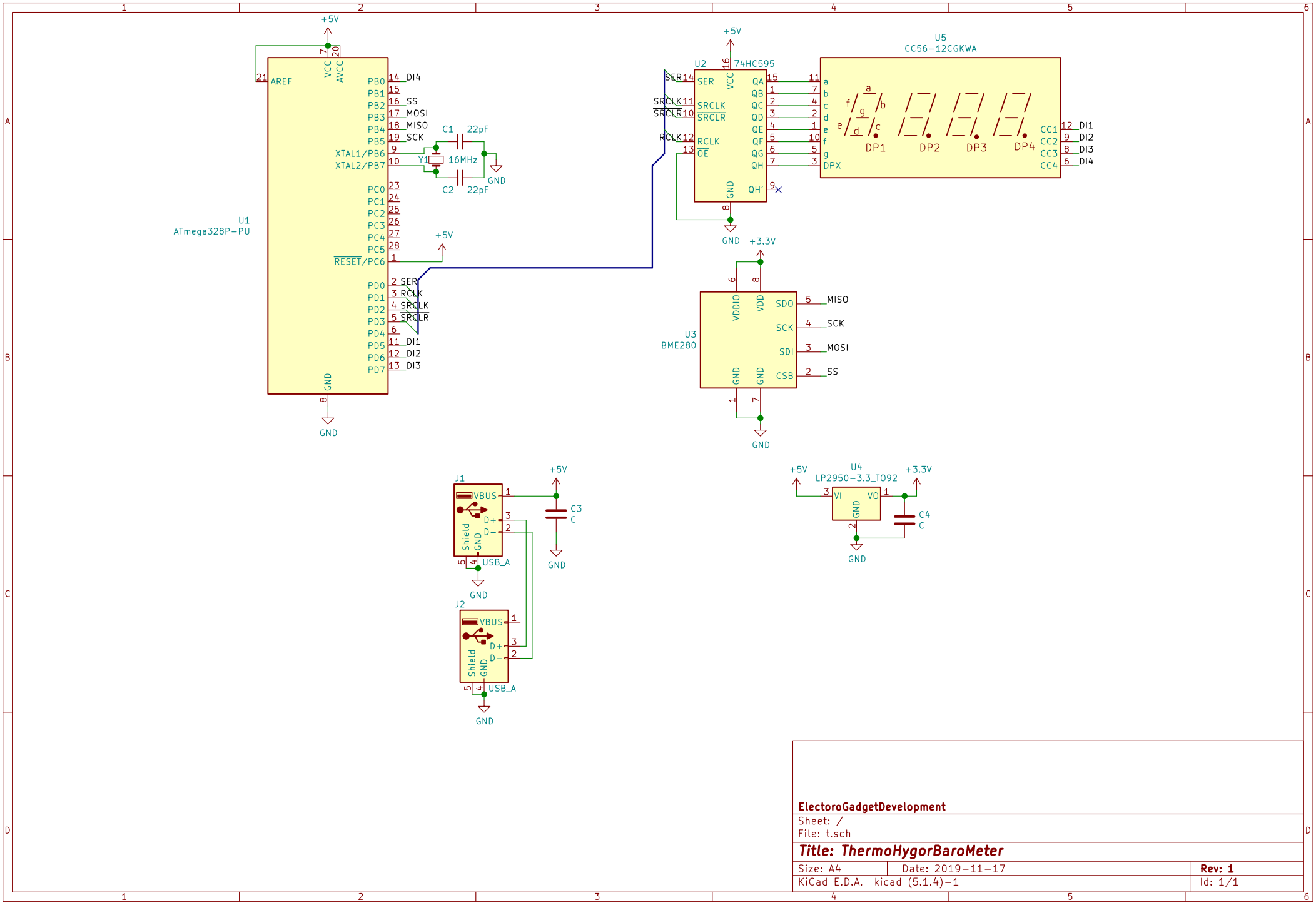

ElectoroGadgetDevelopment

Sheet: /

File: t.sch

Title: ThermoHygorBaroMeter

Size: A4	Date: 2019-11-17	Rev: 1
KiCad E.D.A. kicad (5.1.4)-1		Id: 1/1