Power (12 V → 5 V 3.3 V)

File: untitled.kicad_sch

bay1

File: bay1.kicad_sch

MCU

File: MCU_sch.kicad_sch

MUX

File: MUX.kicad_sch

Buck_3.3V

File: Buck_3.3V_sch.kicad_sch

LEDs_Driver

File: LEDs_driver.kicad_sch

GND → GND

VIN_12V → +12V

3.3V → +3.3V

H5 MountingHole

H6 MountingHole

H7 MountingHole

H8 MountingHole

UART_TX

UART_RX

SWDIO

SWCLK

NRST

Drawn by: Takiyeddin Gherras
v1.0
Skadi 6-Bay Smart Charger
EOS Positioning Systems

Sheet: /
File: 6_bay_charg.kicad_sch

Title: 8_bay_smart

Size: A4	Date: 2025-10-14	**Rev: Rev A**
KiCad E.D.A. 9.0.6		Id: 1/7

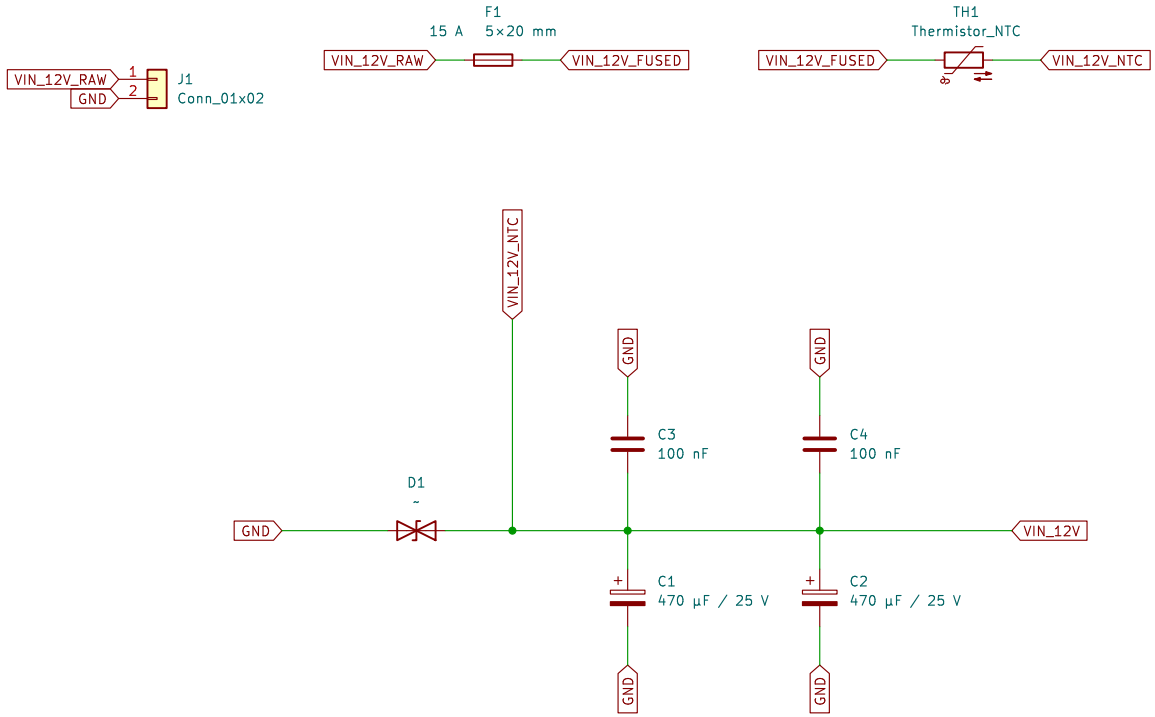

Drawn by: Takiyeddin Gherras
v1.0
Skadi 6-Bay Smart Charger
EOS Positioning Systems

Sheet: /Power (12 V → 5 V 3.3 V)/
File: untitled.kicad_sch

Title: Power (12 V → 5 V / 3.3 V)

Size: A4	Date:	**Rev: Rev A**
KiCad E.D.A. 9.0.6		Id: 2/7

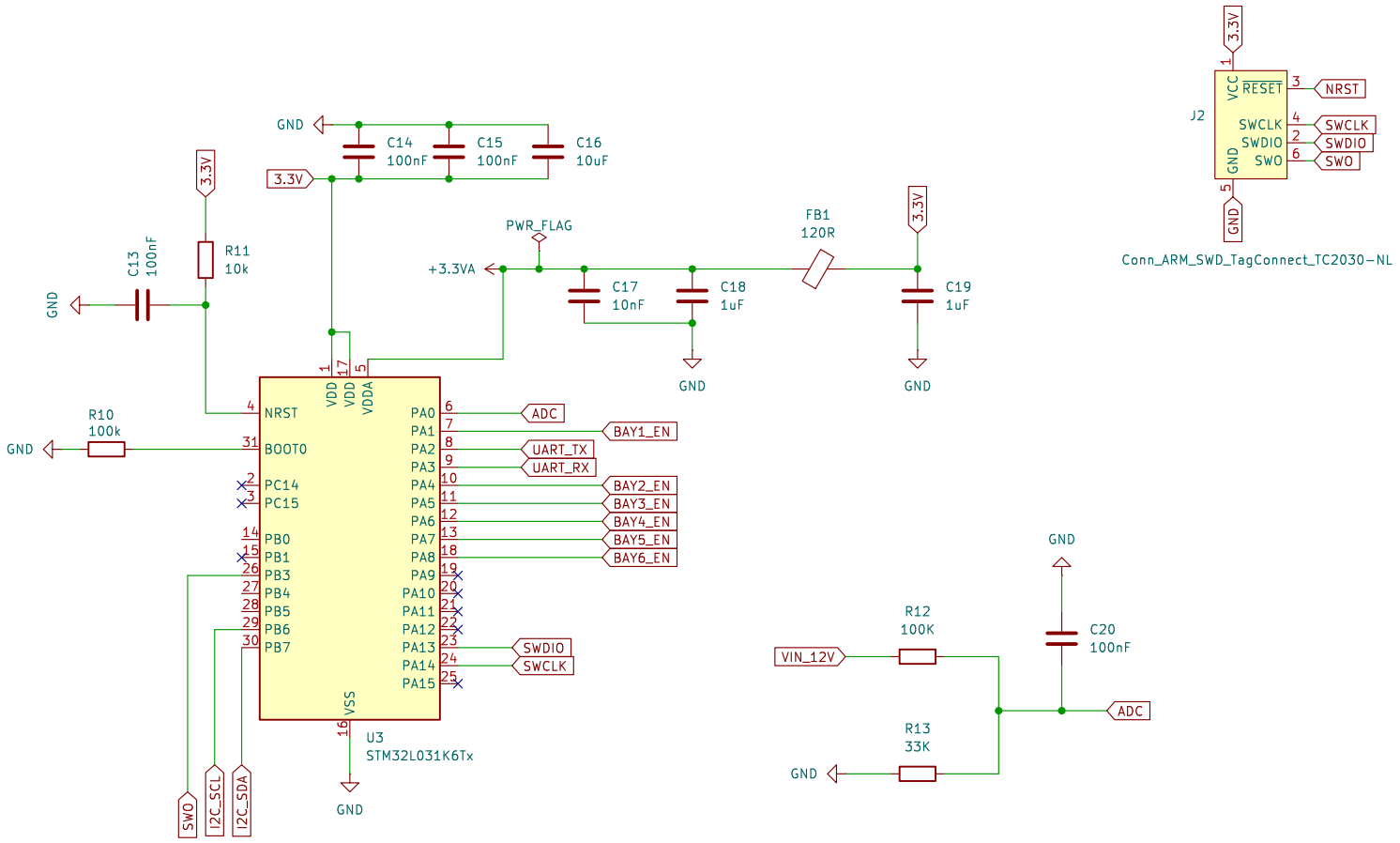

Drawn by: Takiyeddin Gherras
v1.0
Skadi 6-Bay Smart Charger
EOS Positioning Systems

Sheet: /MCU/
File: MCU_sch.kicad_sch

Title: MCU

Size: A4	Date:	**Rev: Rev A**
KiCad E.D.A. 9.0.6		Id: 3/7

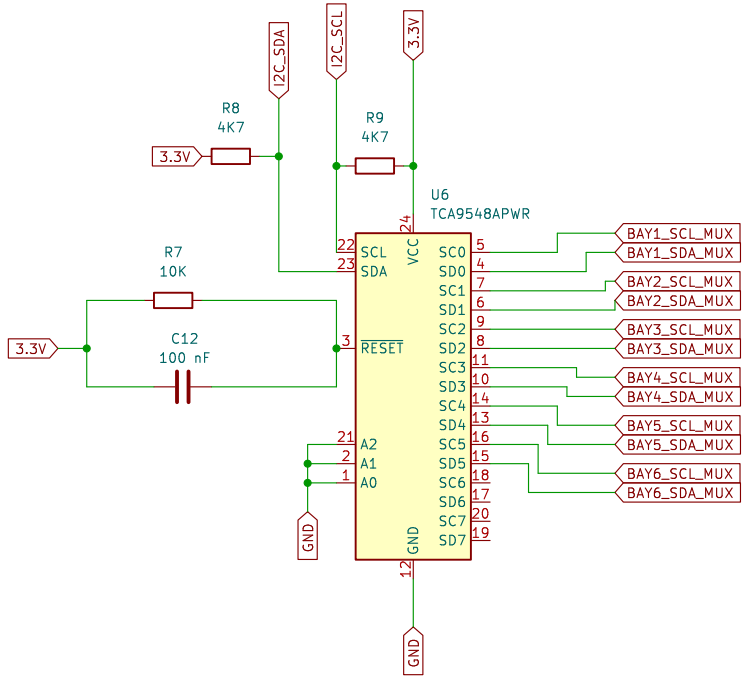

Drawn by: Takiyeddin Gherras
v1.0
Skadi 6-Bay Smart Charger
EOS Positioning Systems

Sheet: /MUX/
File: MUX.kicad_sch

Title: MUX

Size: A4	Date:	**Rev: Rev A**
KiCad E.D.A. 9.0.6		Id: 4/7

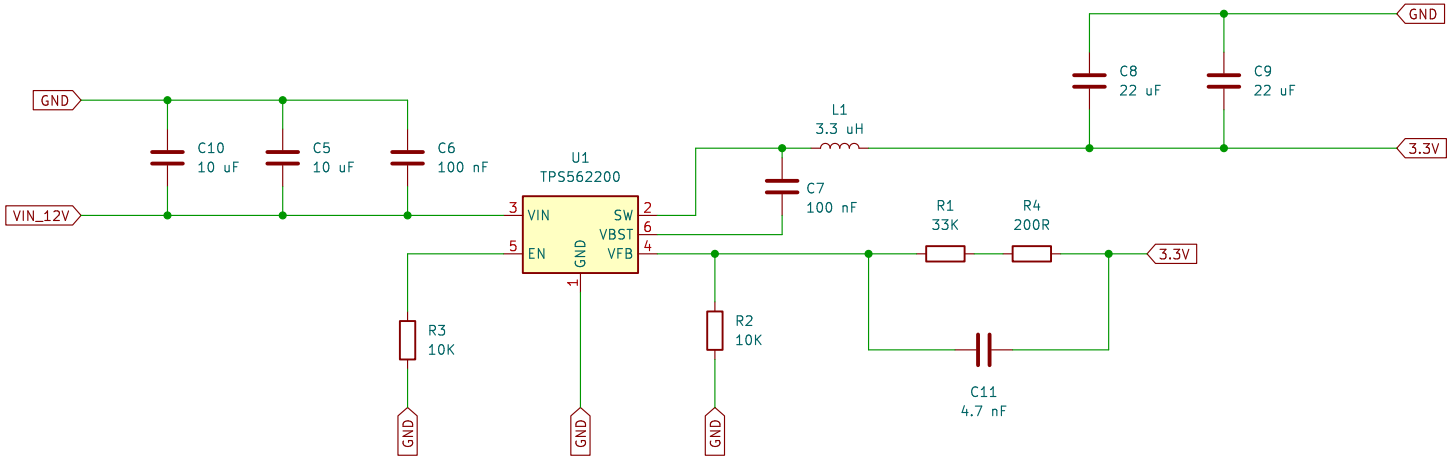

Drawn by: Takiyeddin Gherras
v1.0
Skadi 6-Bay Smart Charger
EOS Positioning Systems

Sheet: /Buck_3.3V/
File: Buck_3.3V_sch.kicad_sch

Title: Buck 3.3V

Size: A4	Date: 2025-12-03	**Rev: Rev A**
KiCad E.D.A. 9.0.6		Id: 5/7

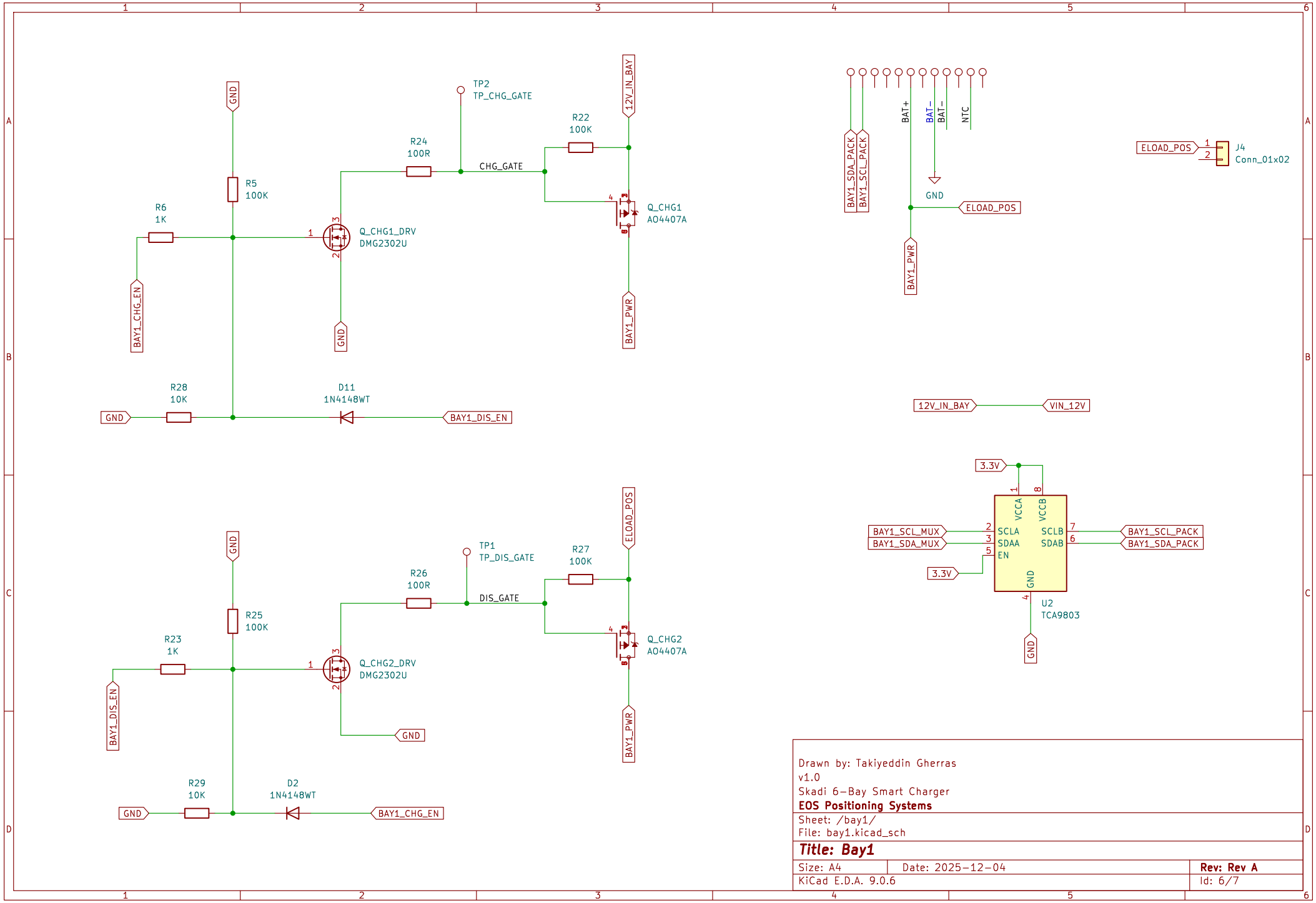

Drawn by: Takiyeddin Gherras
v1.0
Skadi 6-Bay Smart Charger
EOS Positioning Systems

Sheet: /bay1/
File: bay1.kicad_sch

Title: Bay1

Size: A4	Date: 2025-12-04	**Rev: Rev A**
KiCad E.D.A. 9.0.6		Id: 6/7

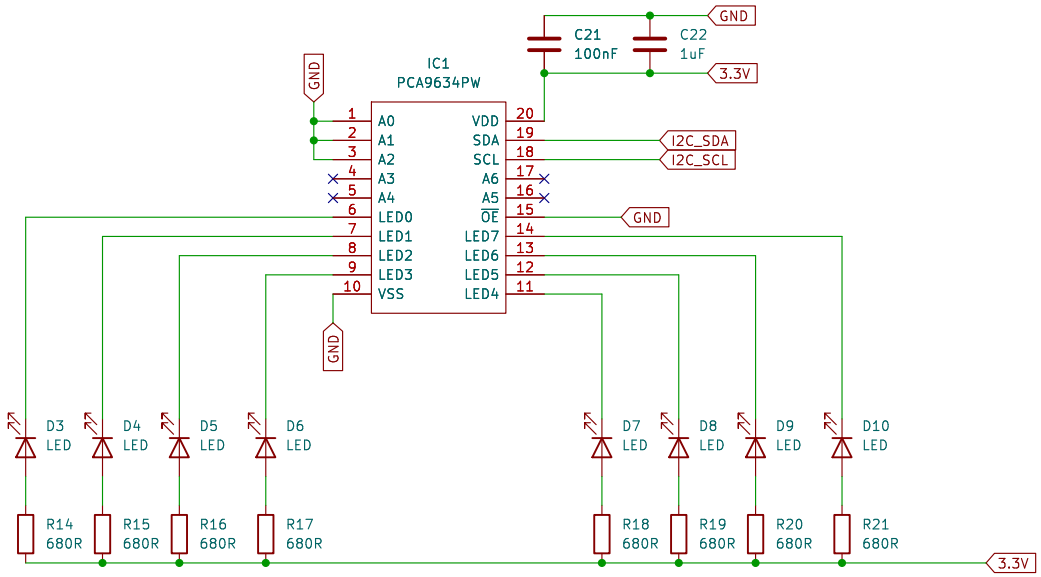

Drawn by: Takiyeddin Gherras
v1.0
Skadi 6-Bay Smart Charger
EOS Positioning Systems

Sheet: /LEDs_Driver/
File: LEDs_driver.kicad_sch

Title: LEDs_Driver

Size: A4	Date:	**Rev: Rev A**
KiCad E.D.A. 9.0.6		Id: 7/7