Power (12 V) + PROT + FAN (page 2)

File: power12v.kicad_sch

bay1

File: bay1.kicad_sch

MCU

File: MCU_sch.kicad_sch

MUX

File: MUX.kicad_sch

Buck_3.3V

File: Buck_3.3V_sch.kicad_sch

LEDs_Driver

File: LEDs_driver.kicad_sch

H5
MountingHole

H6
MountingHole

H7
MountingHole

H8
MountingHole

Drawn by: Takiyeddin Gherras
v1.0
Skadi 6-Bay Smart Charger
EOS Positioning Systems

Sheet: /
File: 6_bay_charg.kicad_sch

Title: 8_bay_smart

Size: A4	Date: 2025-10-14	**Rev: Rev A**
KiCad E.D.A. 9.0.6		Id: 1/7

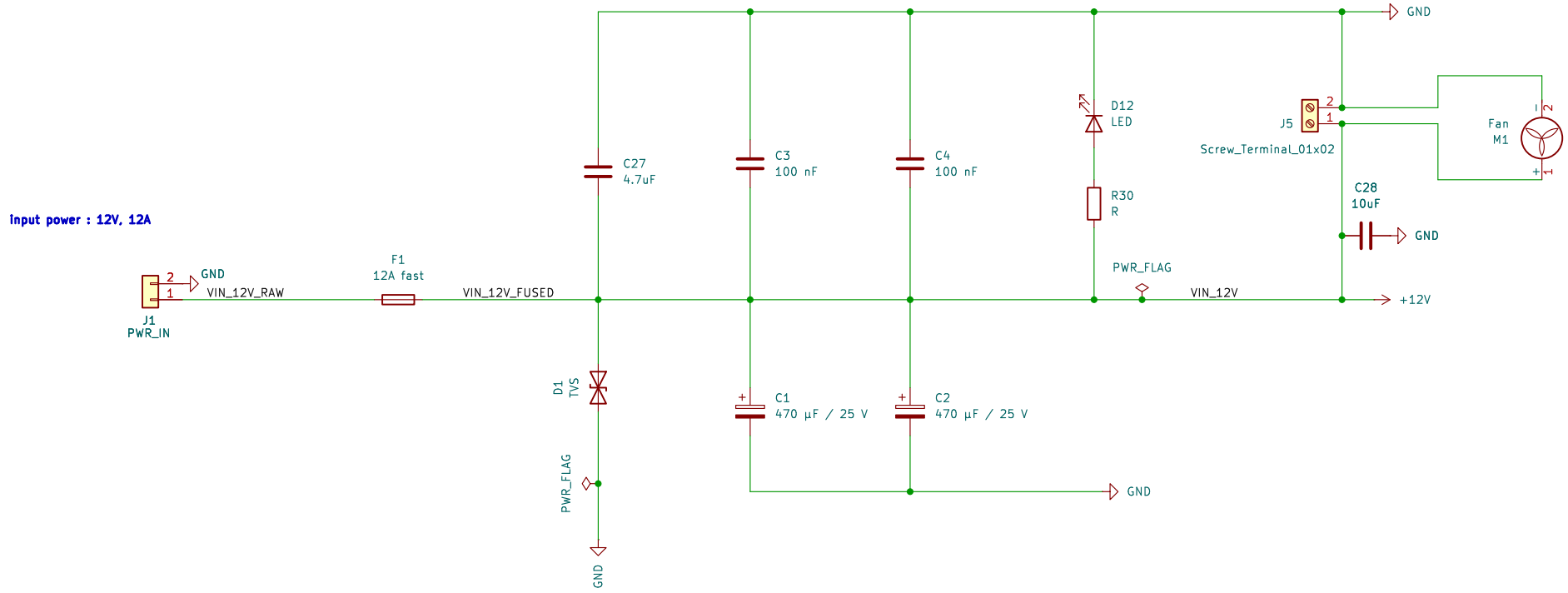

power input 12V + Fan

Drawn by: Takiyeddin Gherras
v1.0
Skadi 6-Bay Smart Charger
EOS Positioning Systems

Sheet: /Power (12 V) + PROT + FAN (page 2)/
File: power12v.kicad_sch

Title: Power prot + Fan

Size: A4	Date:	**Rev: Rev A**
KiCad E.D.A. 9.0.6		Id: 2/7

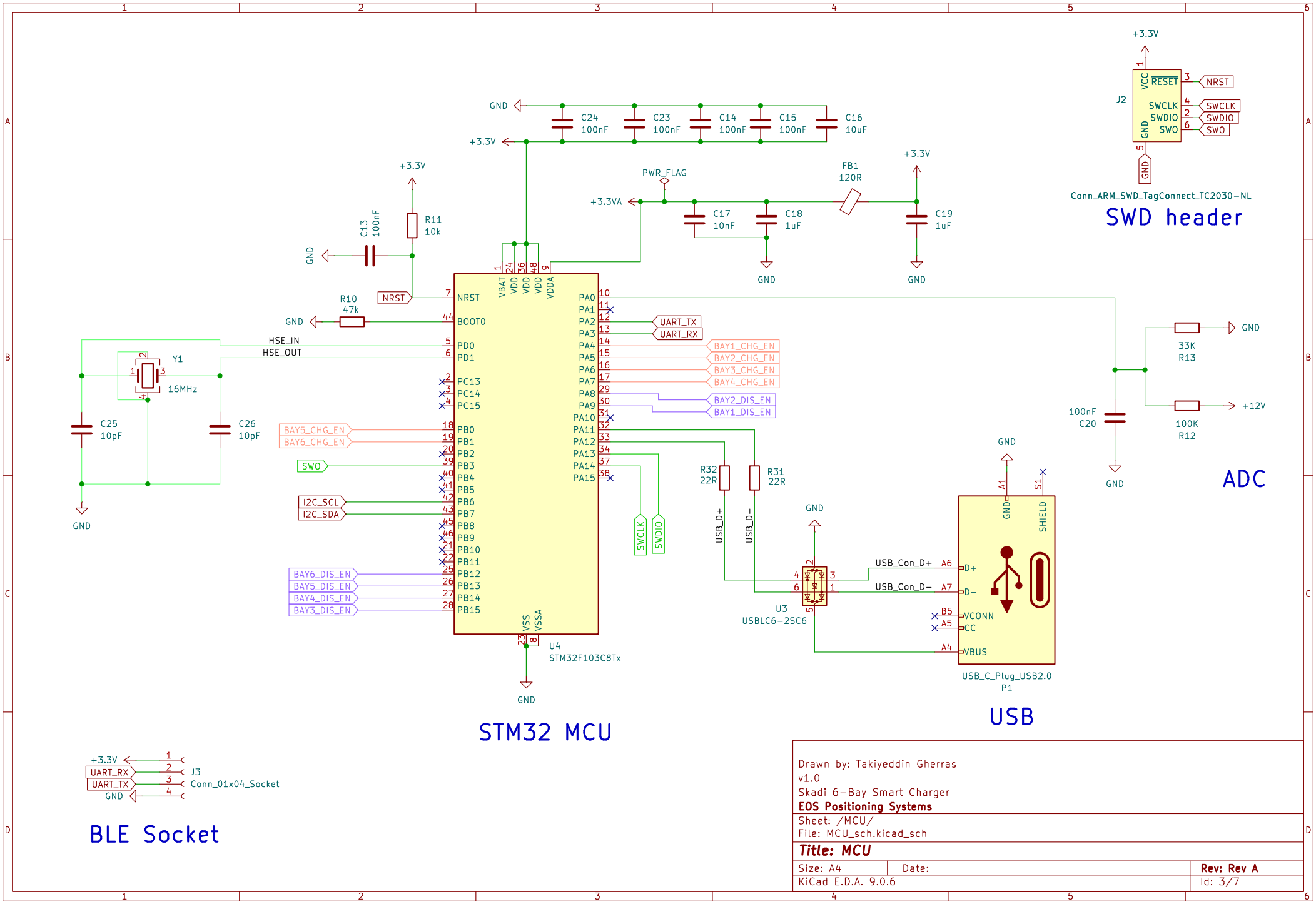
SWD header
Conn_ARM_SWD_TagConnect_TC2030-NL
J2
+3.3V
VCC
RESET
NRST
SWCLK
SWDIO
SWO
GND
ADC
33K
R13
100K
R12
100nF
C20
+12V
STM32 MCU
U4
STM32F103C8Tx
NRST
BOOT0
PD0
PD1
PC13
PC14
PC15
PB0
PB1
PB2
PB3
PB4
PB5
PB6
PB7
PB8
PB9
PB10
PB11
PB12
PB13
PB14
PB15
PA0
PA1
PA2
PA3
PA4
PA5
PA6
PA7
PA8
PA9
PA10
PA11
PA12
PA13
PA14
PA15
VBAT
VDD
VDDA
VSS
VSSA
HSE_IN
HSE_OUT
Y1
16MHz
C25
10pF
C26
10pF
R10
47k
R11
10k
C13
100nF
C24
100nF
C23
100nF
C14
100nF
C15
100nF
C16
10uF
PWR_FLAG
+3.3VA
C17
10nF
C18
1uF
FB1
120R
C19
1uF
UART_TX
UART_RX
BAY1_CHG_EN
BAY2_CHG_EN
BAY3_CHG_EN
BAY4_CHG_EN
BAY2_DIS_EN
BAY1_DIS_EN
BAY5_CHG_EN
BAY6_CHG_EN
SWO
I2C_SCL
I2C_SDA
BAY6_DIS_EN
BAY5_DIS_EN
BAY4_DIS_EN
BAY3_DIS_EN
SWCLK
SWDIO
R32
22R
R31
22R
USB_D+
USB_D-
U3
USBLC6-2SC6
USB_Con_D+
USB_Con_D-
USB
USB_C_Plug_USB2.0
P1
D+
D-
VCONN
CC
VBUS
SHIELD
A1
S1
A6
A7
B5
A5
A4
BLE Socket
J3
Conn_01x04_Socket
UART_RX
UART_TX
Drawn by: Takiyeddin Gherras
v1.0
Skadi 6-Bay Smart Charger
EOS Positioning Systems
Sheet: /MCU/
File: MCU_sch.kicad_sch
Title: MCU
Size: A4
Date:
Rev: Rev A
KiCad E.D.A. 9.0.6
Id: 3/7

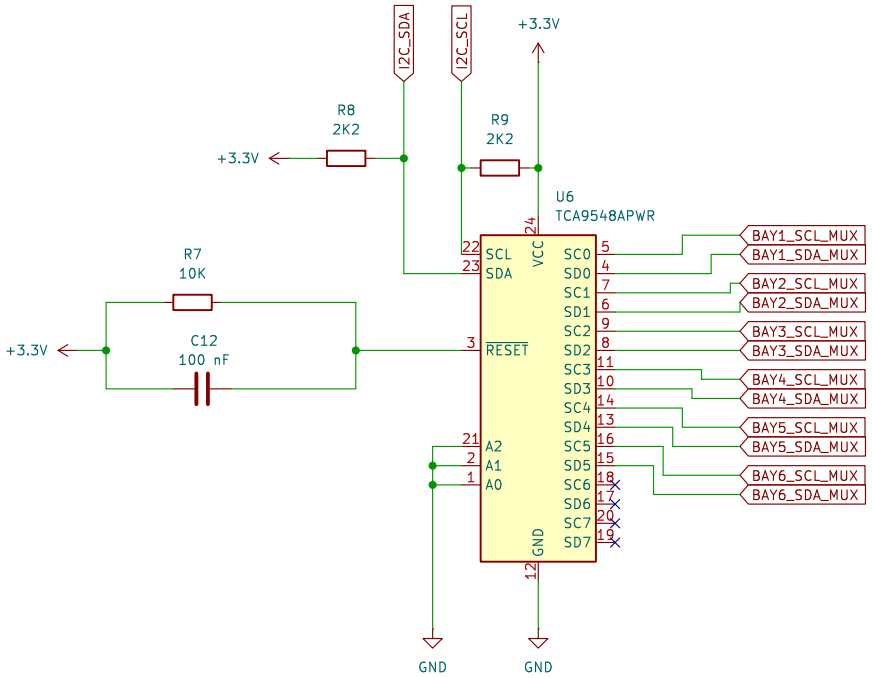

MUX

Drawn by: Takiyeddin Gherras
v1.0
Skadi 6-Bay Smart Charger
EOS Positioning Systems

Sheet: /MUX/
File: MUX.kicad_sch

Title: MUX

Size: A4	Date:	**Rev: Rev A**
KiCad E.D.A. 9.0.6		Id: 4/7

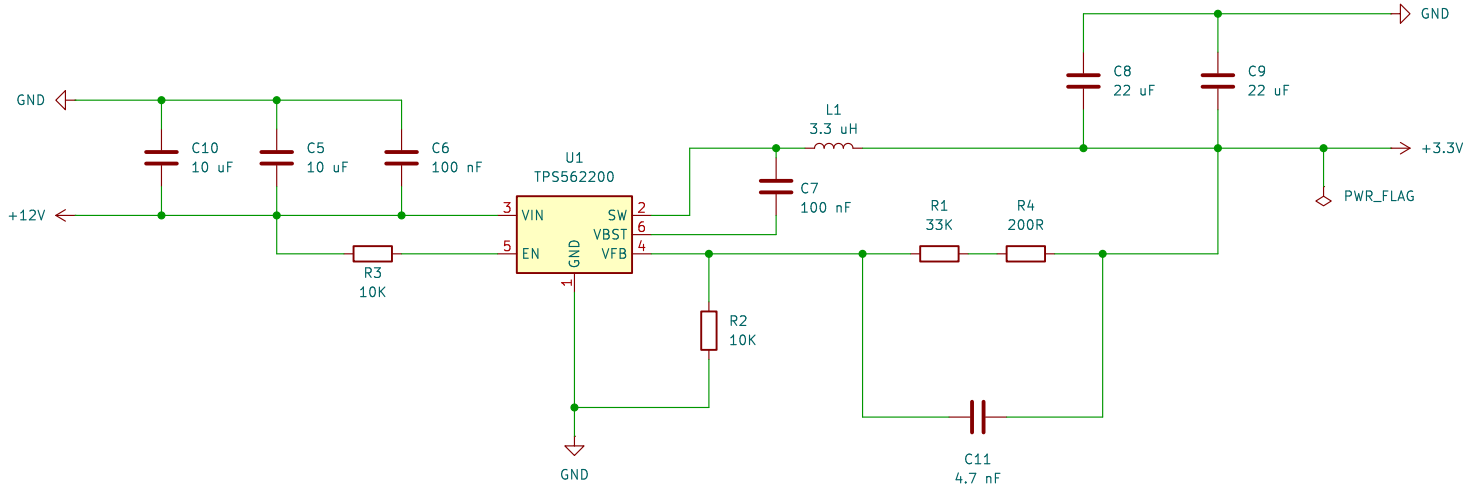

3.3V Buck

Drawn by: Takiyeddin Gherras
v1.0
Skadi 6-Bay Smart Charger
EOS Positioning Systems

Sheet: /Buck_3.3V/
File: Buck_3.3V_sch.kicad_sch

Title: Buck 3.3V

Size: A4	Date: 2025-12-03	**Rev: Rev A**
KiCad E.D.A. 9.0.6		Id: 5/7

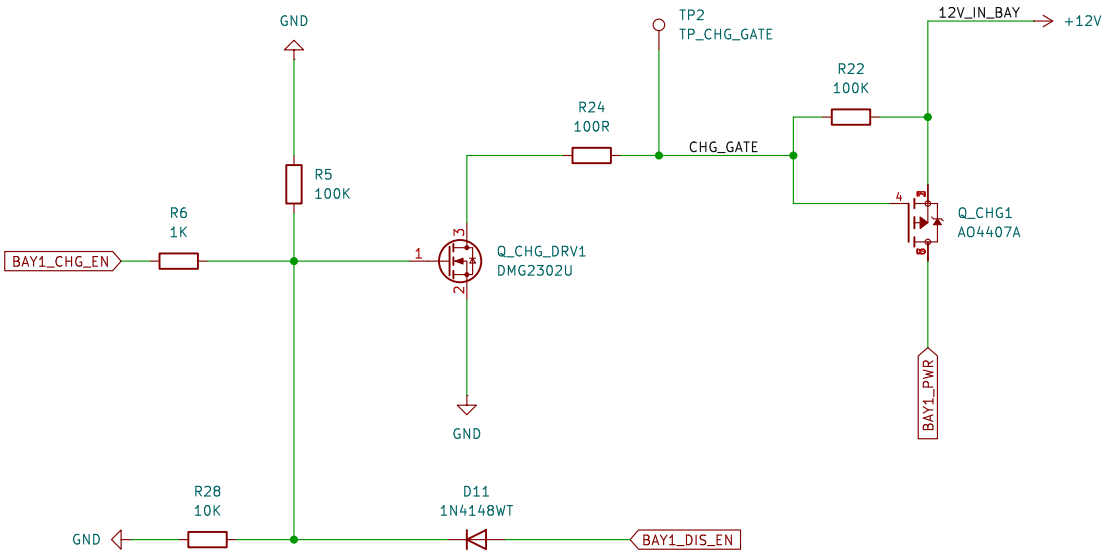

Charge Power Switch

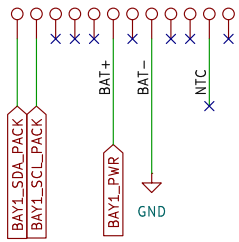

Pogo pins

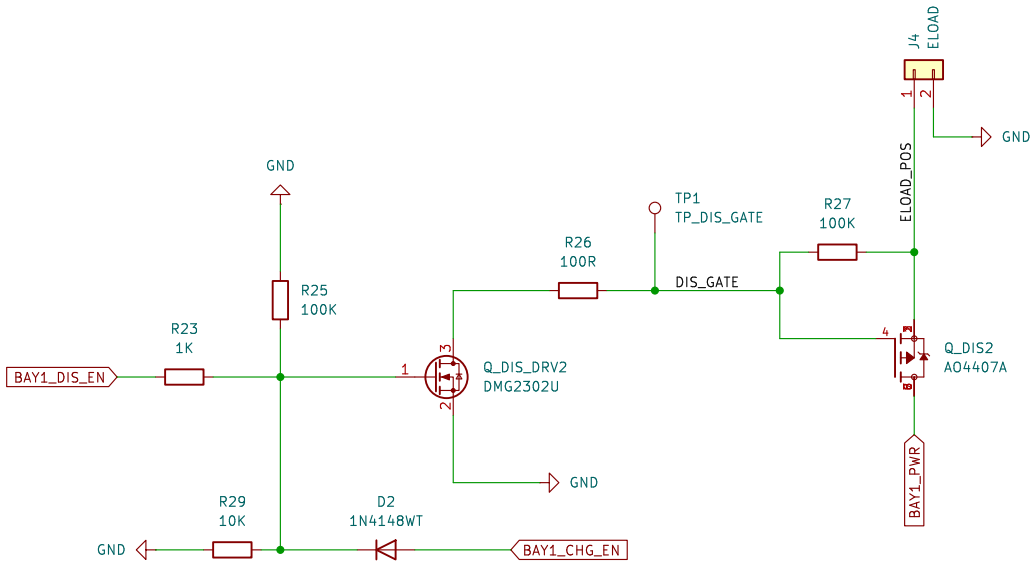

Discharge Power Switch

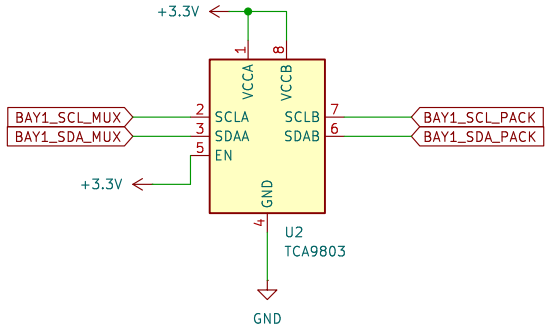

I2C Repeater

Drawn by: Takiyeddin Gherras
v1.0
Skadi 6-Bay Smart Charger
EOS Positioning Systems

Sheet: /bay1/
File: bay1.kicad_sch

Title: Bay1

Size: A4	Date: 2025-12-04	**Rev: Rev A**
KiCad E.D.A. 9.0.6		Id: 6/7

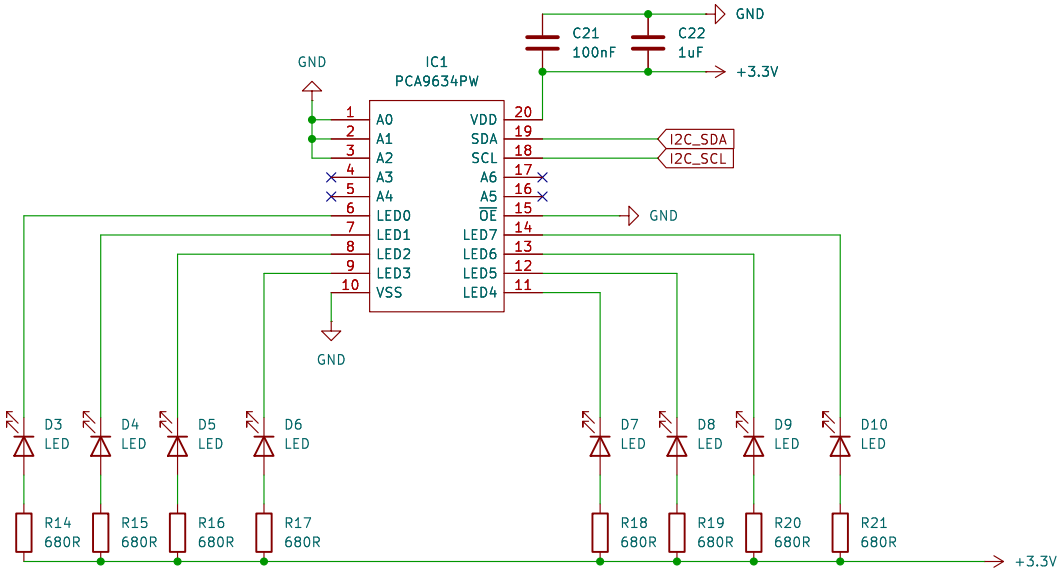

LED driver

Drawn by: Takiyeddin Gherras
v1.0
Skadi 6-Bay Smart Charger
EOS Positioning Systems

Sheet: /LEDs_Driver/
File: LEDs_driver.kicad_sch

Title: LEDs_Driver

Size: A4	Date:	**Rev: Rev A**
KiCad E.D.A. 9.0.6		Id: 7/7