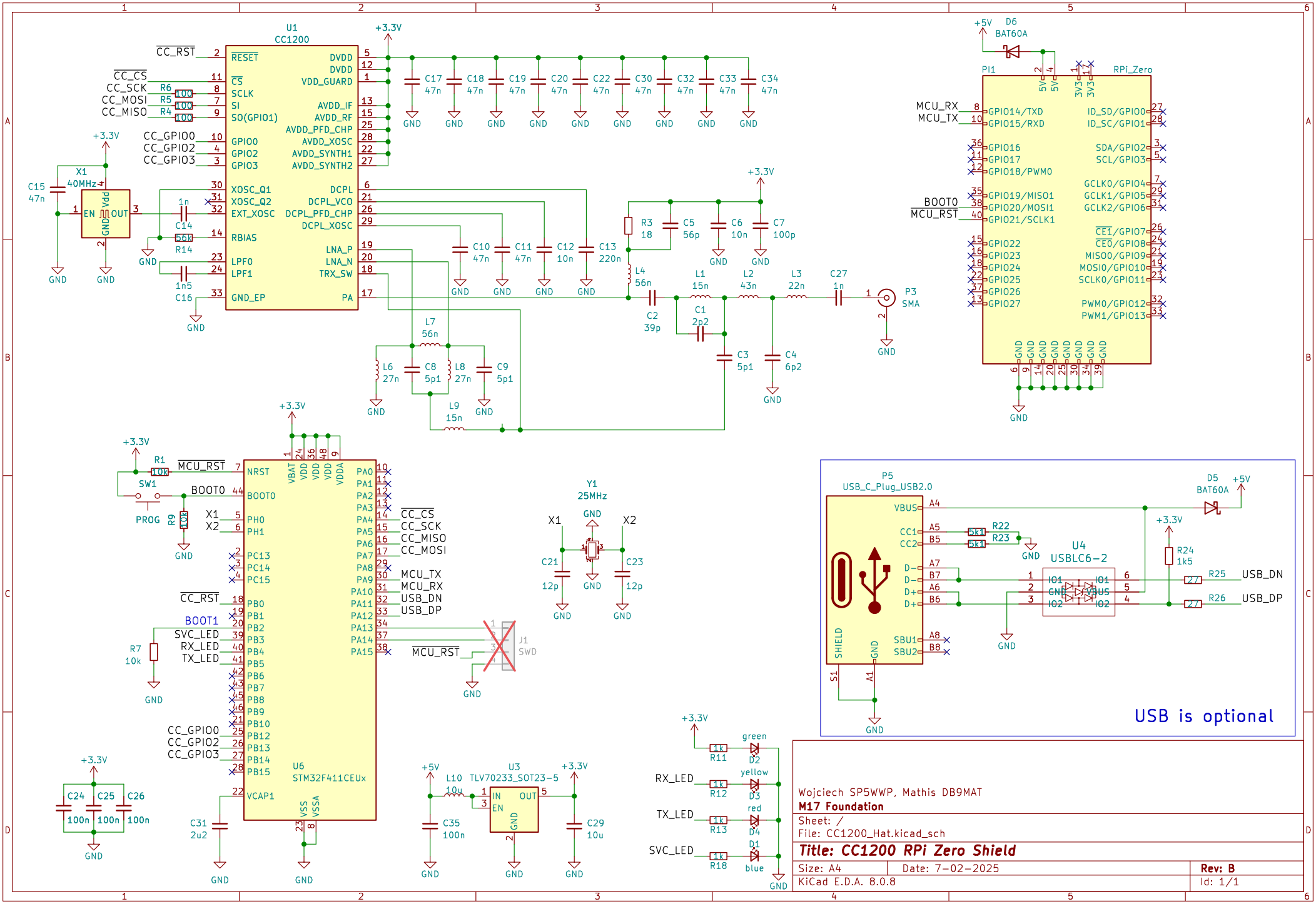


Wojciech SP5WWP, Mathis DB9MAT

**M17 Foundation**

Sheet: /

File: CC1200_Hat.kicad_sch

***Title: CC1200 RPi Zero Shield***

| | | |
|---|---|---|
| Size: A4 | Date: 7-02-2025 | **Rev: B** |
| KiCad E.D.A. 8.0.8 | | Id: 1/1 |