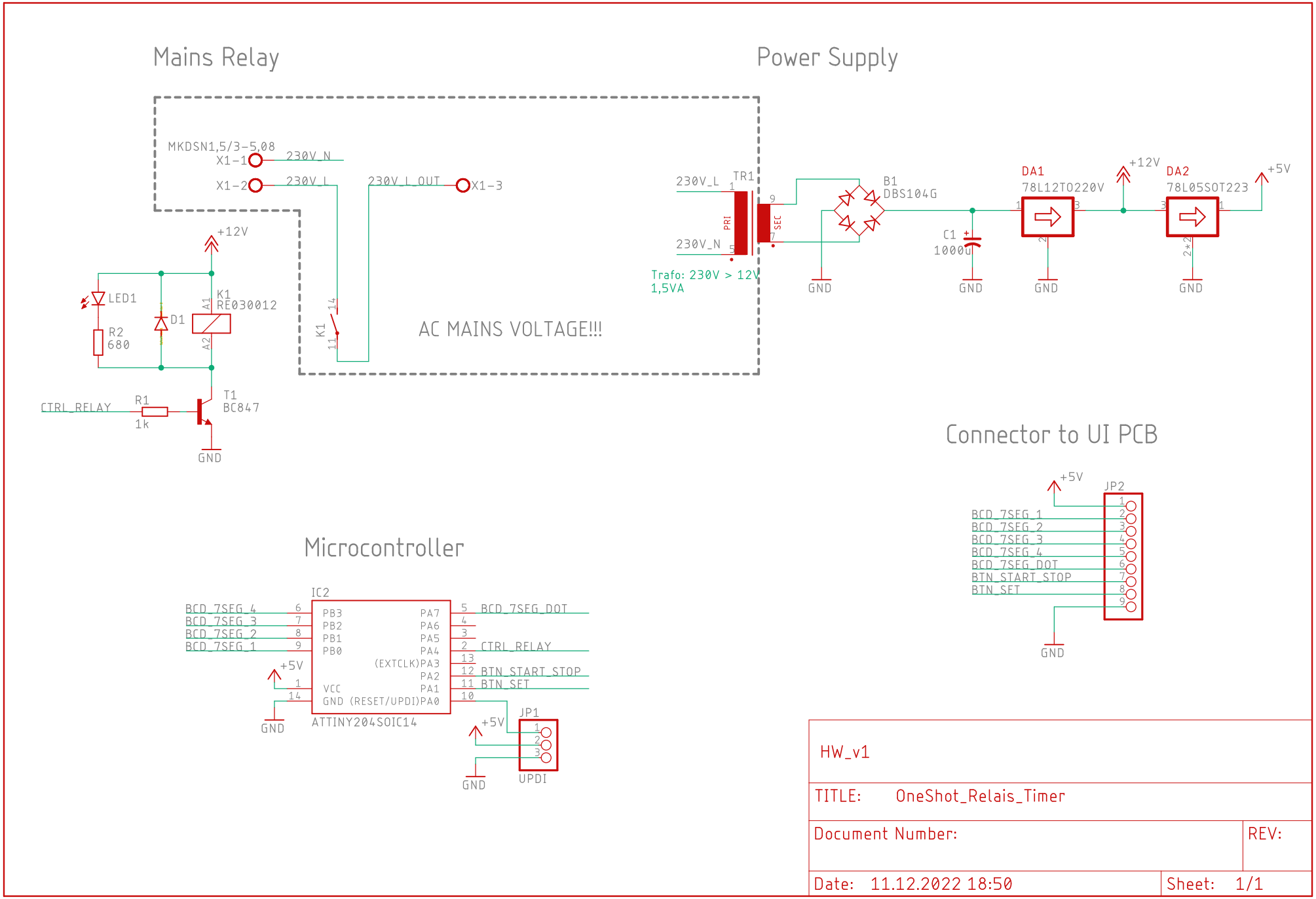
Mains Relay
Power Supply
MKDSN1,5/3-5,08
X1-1
X1-2
230V_N
230V_L
230V_L_OUT
X1-3
+12V
LED1
R2
680
D1
K1
RE030012
A1
A2
K1
14
11
AC MAINS VOLTAGE!!!
CTRL_RELAY
R1
1k
T1
BC847
GND
230V_L
230V_N
TR1
PRI
SEC
Trafo: 230V > 12V
1,5VA
B1
DBS104G
C1
1000µ
DA1
78L12TO220V
+12V
DA2
78L05SOT223
+5V
Connector to UI PCB
+5V
JP2
BCD_7SEG_1
BCD_7SEG_2
BCD_7SEG_3
BCD_7SEG_4
BCD_7SEG_DOT
BTN_START_STOP
BTN_SET
Microcontroller
IC2
BCD_7SEG_4
BCD_7SEG_3
BCD_7SEG_2
BCD_7SEG_1
PB3
PB2
PB1
PB0
VCC
GND (RESET/UPDI)
PA7
PA6
PA5
PA4
(EXTCLK)PA3
PA2
PA1
PA0
BCD_7SEG_DOT
CTRL_RELAY
BTN_START_STOP
BTN_SET
ATTINY204SOIC14
+5V
JP1
UPDI
HW_v1
TITLE: OneShot_Relais_Timer
Document Number:
REV:
Date: 11.12.2022 18:50
Sheet: 1/1