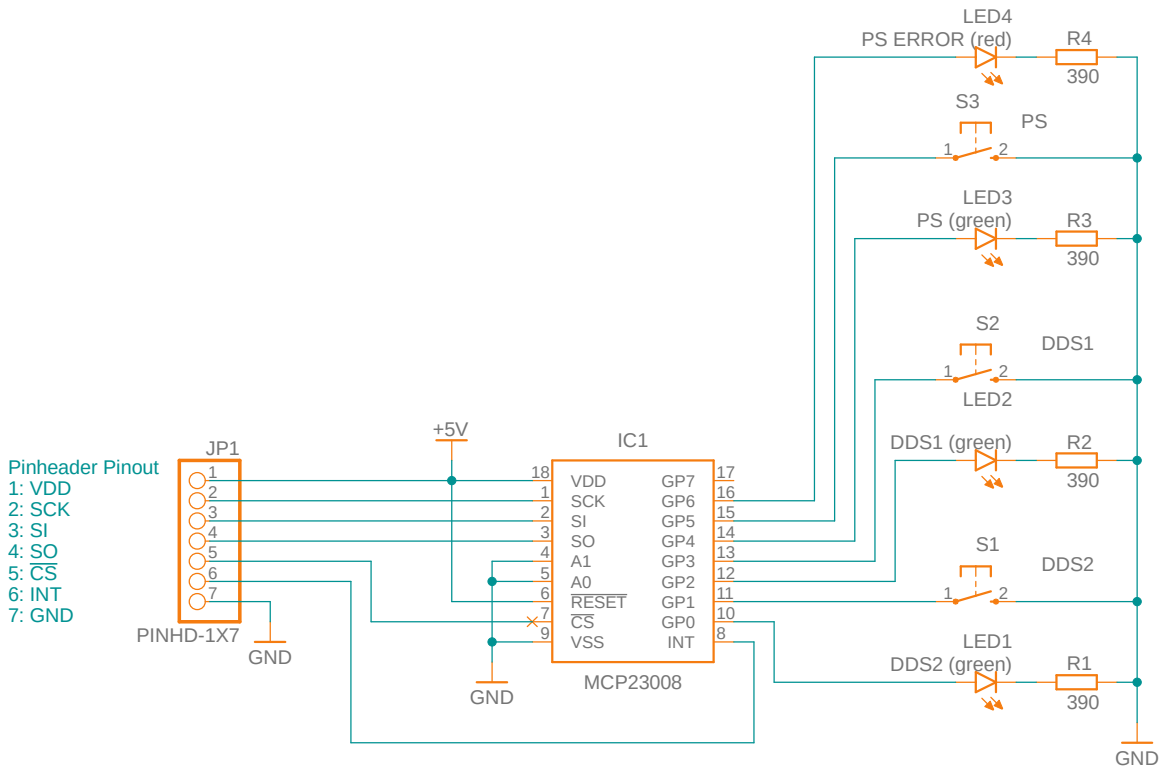

OutputControls v4

03.09.2024 21:40

Sheet: 1/1