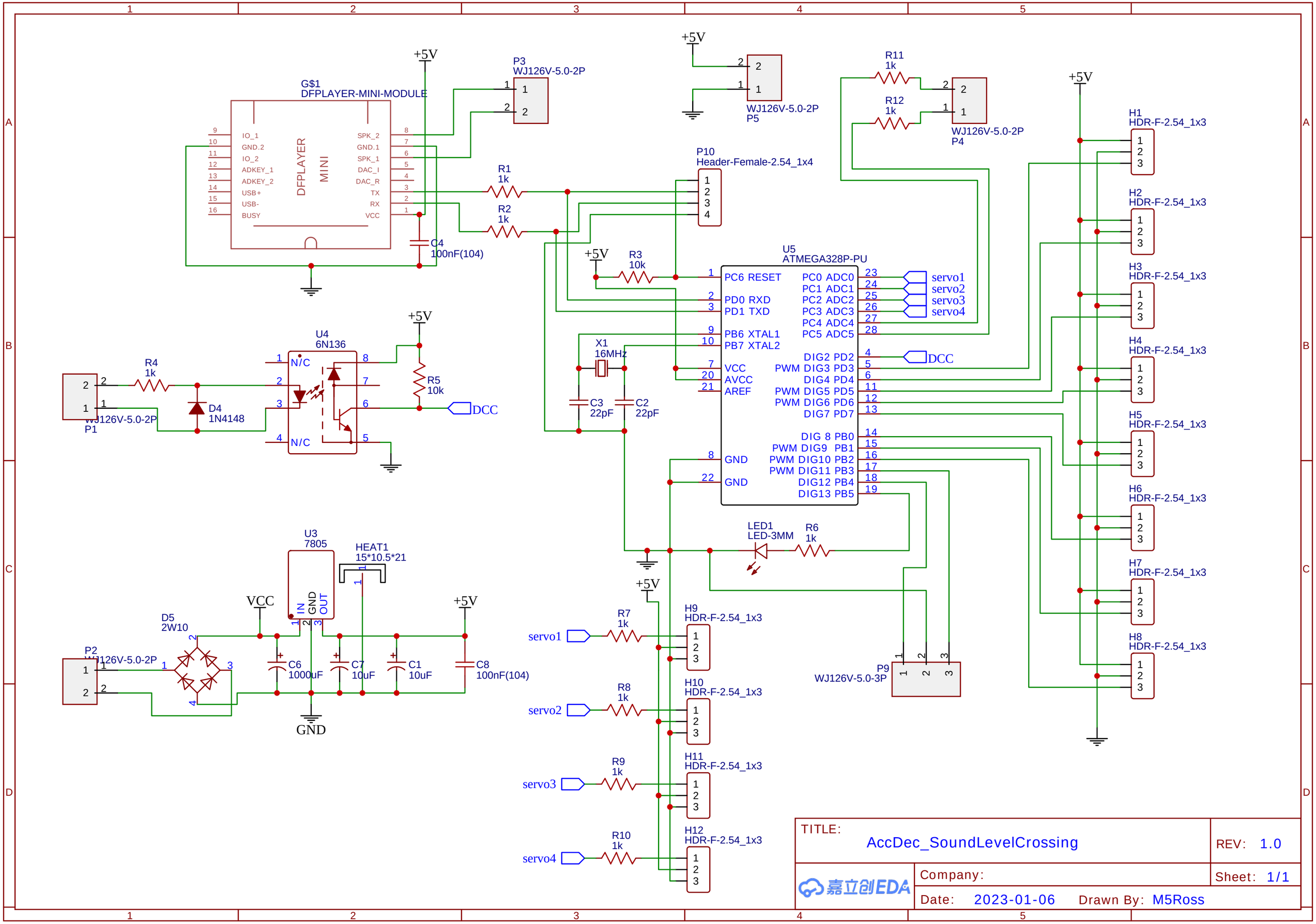
G$1
DFPLAYER-MINI-MODULE
DFPLAYER MINI
IO_1
GND.2
IO_2
ADKEY_1
ADKEY_2
USB+
USB-
BUSY
SPK_2
GND.1
SPK_1
DAC_I
DAC_R
TX
RX
VCC
C4
100nF(104)
P3
WJ126V-5.0-2P
P5
WJ126V-5.0-2P
P4
WJ126V-5.0-2P
R11
1k
R12
1k
R1
1k
R2
1k
P10
Header-Female-2.54_1x4
R3
10k
U5
ATMEGA328P-PU
PC6 RESET
PD0 RXD
PD1 TXD
PB6 XTAL1
PB7 XTAL2
VCC
AVCC
AREF
GND
GND
PC0 ADC0
PC1 ADC1
PC2 ADC2
PC3 ADC3
PC4 ADC4
PC5 ADC5
DIG2 PD2
PWM DIG3 PD3
DIG4 PD4
PWM DIG5 PD5
PWM DIG6 PD6
DIG7 PD7
DIG 8 PB0
PWM DIG9 PB1
PWM DIG10 PB2
PWM DIG11 PB3
DIG12 PB4
DIG13 PB5
servo1
servo2
servo3
servo4
DCC
X1
16MHz
C3
22pF
C2
22pF
LED1
LED-3MM
R6
1k
P9
WJ126V-5.0-3P
H1
HDR-F-2.54_1x3
H2
HDR-F-2.54_1x3
H3
HDR-F-2.54_1x3
H4
HDR-F-2.54_1x3
H5
HDR-F-2.54_1x3
H6
HDR-F-2.54_1x3
H7
HDR-F-2.54_1x3
H8
HDR-F-2.54_1x3
H9
HDR-F-2.54_1x3
H10
HDR-F-2.54_1x3
H11
HDR-F-2.54_1x3
H12
HDR-F-2.54_1x3
R7
1k
R8
1k
R9
1k
R10
1k
U4
6N136
N/C
N/C
R4
1k
D4
1N4148
P1
WJ126V-5.0-2P
R5
10k
DCC
U3
7805
IN
GND
OUT
HEAT1
15*10.5*21
VCC
D5
2W10
P2
WJ126V-5.0-2P
C6
1000uF
C7
10uF
C1
10uF
C8
100nF(104)
GND
+5V
TITLE:
AccDec_SoundLevelCrossing
REV: 1.0
Company:
Sheet: 1/1
Date: 2023-01-06
Drawn By: M5Ross
嘉立创EDA