B161479

RAJIV GANDHI UNIVERSITY OF KNOWLEDGE TECHNOLOGIES, BASAR
(A.Y. 2020-2021)

Subject: FLAT
Subject Code: CS3103
Exam: E3/SEM1/CSE/EST/

Date: 30/09/2021
Time: 120Min
Max Marks: 60

SECTION –A (30M)

NOTE:
All bits are compulsory, there is NO choice in Section-A. 2*15=30

****

1) pumping lemma is used to prove the language is _____language.
   a)regular b)not regular c) context sensitive d)none

2) Well structured problems are always decidable. [True/False]

3) $\varphi^* =$_____
   a)ε b)φ c)both d)none

4) _____of two regular language is regular language.
   a)difference .b)union c)intersection d)all of the above.

5) Every language defined by a Pushdown automaton is a_____language.
   a)Regular b)context free c)context sensitive d)recursive

6) Linear bound automata is used to recognize _____language.
   a)Regular b)context free c)context sensitive d)recursive

7) The intersection of a Context Free Language and a regular language is_____
   a)need not be regular b)need not be context free
   c)always regular .d)is always CFL.

8) For every NPDA there is equivalent DPDA accepting the same language(True/False).

9) Write differences between Moore machine and mealy machine.

10) Write differences between Ambiguous grammar and unambiguous grammar.

11) Consider the following grammar find LMD and RMD for string w=baaaababaab.
   S→baXaS|ab X→Xab|aa

12) Eliminate Useless symbols in the Grammar.
   S→aS|BC|A A→a B→aa C→aCb

Scanned by TapScanner

13) Eliminate unit productions from the grammar below.

$S \rightarrow Aa|B$ $B \rightarrow A|bb$ $A \rightarrow a|bc|B$

14) Give the language generated by the grammar.

$S \rightarrow aS|bS|a|b$

15) Write regular expression for the following.

Set of all strings having odd number of 1's over $\Sigma=\{0,1\}$.

SECTION – B(30M)

Answer any three questions. Each question carries 10 marks.

1) Convert the following grammar to CNF.

$S \rightarrow AB|aB$

$A \rightarrow aab|\varepsilon$

$B \rightarrow bbA$

2) Design a Turing machine that gives two's complement for the given binary representation.

3) Design a Pushdown automata which accepts $L=\{0^n 1^{2n} | n>=1\}$.

4) a. Design a DFA that accepts set of all strings contain 001 as a substring over $\Sigma=\{0,1\}$.[5 marks]

b.Write differences between NFA and DFA. *[5 marks]*

5) what do you mean by decidable and undecidable problems?Give examples.

6) Construct the minimum DFA for the given DFA.

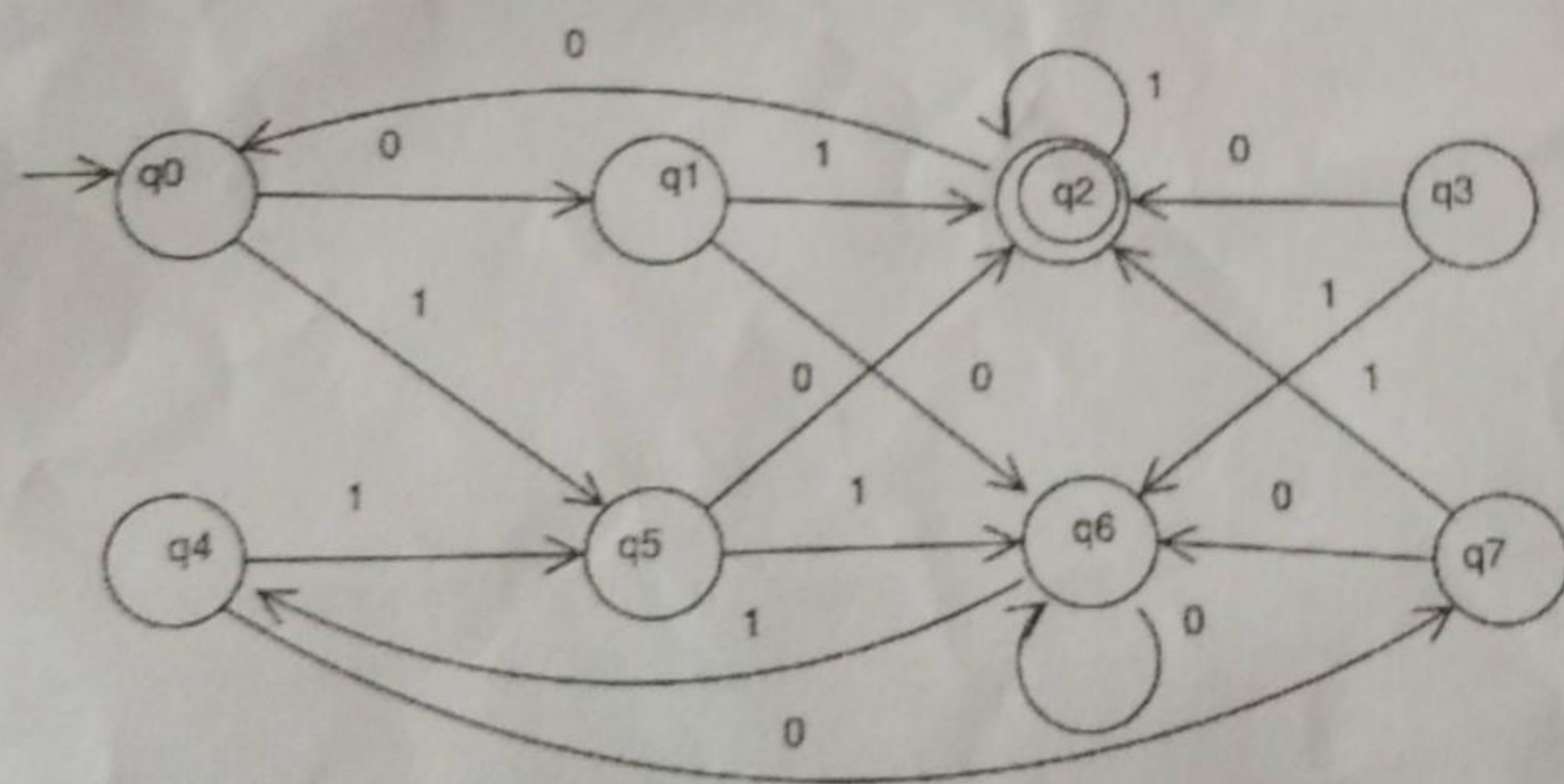

Scanned by TapScanner

Subject Code: CS3103 Time: 30min

Exam: E3/SEM1/CSE/MT Max Marks: 20

SECTION –A (30M)

NOTE:

All bits are compulsory, there is NO choice in Section-A. 2*10=20

****

1) The basic operations that can be applied on regular expressions are____[ ]
   a)union b)concatenation c) closure d)all of the above

2) The syntax of any high level language is defined with_____grammar.[ ]
   a)Regular b)context free c)context sensitive d)recursive

3) $\varepsilon^* =$_____[ ]
   a)ε b)φ c)both d)none

4) Language generated by grammar S→SS is_____.[ ]
   a) φ b)SS c)not defined d)all of the above.

5) Every language defined by a Finite automatonis a_____language.[ ]
   a)Regular b)context free c)context sensitive d)recursive

6) NFA with ε can increase the processing time of NFA [true/false]

7) A non deterministic turing machine is called_____.[ ]

   a)NPDA b)Linear bound automata c)finite automata d)PDA

8) $L=\{a^n b^n c^n / n=1,2,3,\ldots\}$ is an example of language that is ____[ ]
   a)context free b)not context free
   c)not context free but whose complement is CF d)none

9) The string 1101 does not belong to the set represented by _____[ ]
   a)110*(0+1) b)1(0+1)*101 c)(10)*(01)*(00+11)* d)none

10) _____method is used to prove the undecidability of halting problem .
   a)Arden's b)diagnalization c)rice d)all

Scanned by TapScanner

RAJIV GANDHI UNIVERSITY OF KNOWLEDGE TECHNOLOGIES, BASAR
RGUKT – Basar
(A.Y. 2020-2021)
E3_CSE_SEM1_REGULAR_Artificial Intelligence

Subject Code: CS3101

Date: 04/10/2021
Branch: CSE

Time: 120 mins
Max Marks: 60

SECTION A
ANSWER ALL OF THE FOLLOWING **(2*15=30 marks)**

1) An AI agent perceives and acts upon the environment using___.
a) Sensors
b) Perceiver
c) Actuators
d) Both a and c

2) Which agent deals with the happy and unhappy state?
a) Utility-based agent
b) Model-based agent
c) Goal-based Agent
d) Learning Agent

3) The search algorithm which is similar to the minimax search, but removes the branches that don't affect the final output is known as__.
a) Depth-first search
b) Breadth-first search
c) Alpha-beta pruning
d) None of the above

4) The PEAS in the task environment is about_____.
a) Peer, Environment, Actuators, Sense
b) Performance, Environment, Actuators, Sensors
c) Perceiving, Environment, Actuators, Sensors
d) None of the above

5) Which statement is valid for the Heuristic function?
a) The heuristic function is used to solve mathematical problems.
b) The heuristic function takes parameters of type string and returns an integer value.
c) The heuristic function does not have any return type.
d) The heuristic function calculates the cost of an optimal path between the pair of states.

6) Adversarial search problems uses _____
a) Competitive Environment
b) Cooperative Environment
c) Neither Competitive nor Cooperative Environment
d) Only Competitive and Cooperative Environment

7) A simple puzzle can be formally defined as a kind of search problem with the following components.
a) Initial State
b) Successor Function
c) Terminal Test
d) All of the mentioned

Scanned by TapScanner

RAJIV GANDHI UNIVERSITY OF KNOWLEDGE TECHNOLOGIES, BASAR
RGUKT – Basar
(A.Y. 2020-2021)
E3_CSE_SEM1_REGULAR_Artificial Intelligence

Subject Code: CS3101

Date: 04/10/2021
Branch: CSE

Time: 120 mins
Max Marks: 60

SECTION A
ANSWER ALL OF THE FOLLOWING (2*15=30 marks)

1) An AI agent perceives and acts upon the environment using____.
a) Sensors
b) Perceiver
c) Actuators
d) Both a and c

2) Which agent deals with the happy and unhappy state?
a) Utility-based agent
b) Model-based agent
c) Goal-based Agent
d) Learning Agent

3) The search algorithm which is similar to the minimax search, but removes the branches that don't affect the final output is known as__.
a) Depth-first search
b) Breadth-first search
c) Alpha-beta pruning
d) None of the above

4) The PEAS in the task environment is about_____.
a) Peer, Environment, Actuators, Sense
b) Performance, Environment, Actuators, Sensors
c) Perceiving, Environment, Actuators, Sensors
d) None of the above

5) Which statement is valid for the Heuristic function?
a) The heuristic function is used to solve mathematical problems.
b) The heuristic function takes parameters of type string and returns an integer value.
c) The heuristic function does not have any return type.
d) The heuristic function calculates the cost of an optimal path between the pair of states.

6) Adversarial search problems uses _____
a) Competitive Environment
b) Cooperative Environment
c) Neither Competitive nor Cooperative Environment
d) Only Competitive and Cooperative Environment

7) A simple puzzle can be formally defined as a kind of search problem with the following components.
a) Initial State
b) Successor Function
c) Terminal Test
d) All of the mentioned

Scanned by TapScanner

8) What is an activation value?
a) weighted sum of inputs
b) threshold value
c) main input to neuron
d) none of the mentioned

9) Negative sign of weight indicates?
a) excitatory input
b) inhibitory input
c) can be either excitatory or inhibitory as such
d) none of the mentioned

10) The process of adjusting the weight is known as?
a) activation
b) synchronisation
c) learning
d) none of the mentioned

11) If a(i) is the input, ^ is the error, n is the learning parameter, then how can weight change in a perceptron model be represented?
a) na(i)
b) n^
c) ^a(i)
d) none of the mentioned

12) State whether Hebb's law is supervised learning or of unsupervised type?
a) supervised
b) unsupervised
c) either supervised or unsupervised
d) can be both supervised & unsupervised

13) widrow & hoff learning law is special case of?
a) hebb learning law
b) perceptron learning law
c) delta learning law
d) none of the mentioned

14) What is an instar topology?
a) when input is given to layer F1, the the jth(say) unit of other layer F2 will be activated to maximum extent
b) when weight vector for connections from jth unit (say) in F2 approaches the activity pattern in F1(comprises of input vector)
c) can be either way
d) none of the mentioned

15) If two layers coincide & weights are symmetric(wij=wji), then what is that structure called?
a) instar
b) outstar
c) autoassociative memory
d) heteroassociative memory

Section B

Answer any Three (3) Questions

1Q)
a) Formulate Vacuum Cleaner problem with PEAS description and a neat state diagram. **(5 marks)**
b) Perform A* Search from node 'S' to 'G' in the graph given below. (Consider the value on the node as heuristic information) **(5 marks)**

Scanned by TapScanner

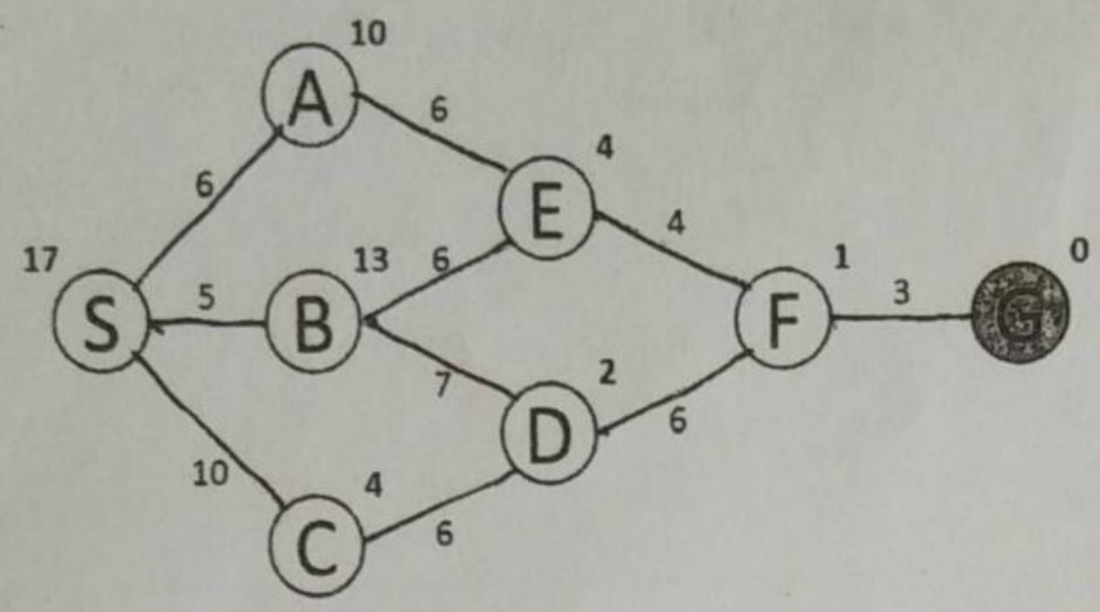

2Q)

a) Perform alpha beta pruning for the following tree (consider root node as maximizer) **(5 marks)**

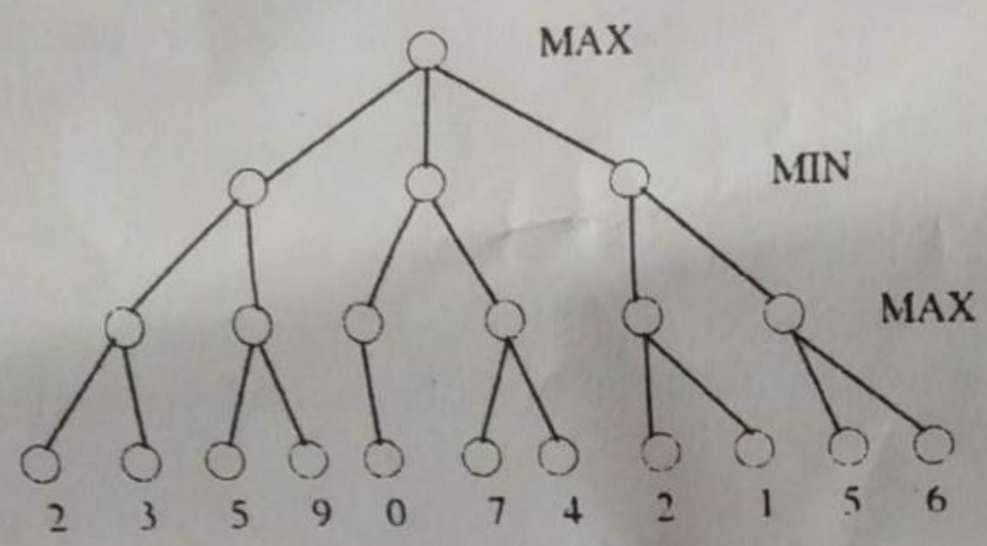

b) All people who are graduating are happy. All happy people smile.

Someone is graduating. Prove - ' is some one smiling?'.**(5 marks)**

3Q) Explain wumpus world problem. Mathematically show how it can be solved using propositional logic. **(10 marks)**

4Q) Explain Version Spaces and Candidate Elimination Algorithm and apply it on the following data. **(10 marks)**

Sky	Temperature	Humid	Wind	Water	Forest	Output
sunny	warm	normal	strong	warm	same	yes
sunny	warm	high	strong	warm	same	yes
rainy	cold	high	strong	warm	change	no
sunny	warm	high	strong	cool	change	yes

5Q) Explain Multi Layer perceptron and output layer weights updation using BackPropagation **(10 marks)**

6Q) Explain basic learning laws of Artificial Neural Networks **(10 marks)**

Scanned by TapScanner

RAJIV GANDHI UNIVERSITY OF KNOWLEDGE TECHNOLOGIES, BASAR
RGUKT – Basar
(A.Y. 2020-2021)
E3_CSE_SEM1_MT_Artificial Intelligence

Subject Code: CS3101

Date: /10/2021
Branch: CSE

Time: mins
Max Marks: 20

ANSWER ALL OF THE FOLLOWING (2*10=20 marks)

1) Which of the following is not a type of environment for artificial agents?
   a) Stochastic
   b) Episodic
   c) Deterministic
   d) None of the above

2) A statement to be proved as true or false using experimental tests or mathematical derivation is called
   a) question
   b) hypothesis
   c) regular expression
   d) automata

3) Which of the following activation function produces output in a range of -infinity to +infinity?
   a) softmax
   b) arctan
   c) linear
   d) threshold

4) Which of the following is a technique for cutting down search for taking imperfect real time decisions in game playing
   a) Quiescent search
   b) Evaluation functions
   c) Both a) and b)
   d) None of the above

5) The concept of differentiating two classes of data based on a line equation separating the classes with maximum margin is called
   a) Linear Regression
   b) Bayesian Belief Networks
   c) Decision tree
   d) Support Vector Machine

6) Which of the following learning rules is unsupervised
   a) hebbs
   b) rosenbalt
   c) perceptron
   d) none of the above

7) Which of the following is **NOT** a basic functional unit of a neural network
   a) Clustering module
   b) feedforward neural network
   c) feedback neural network
   d) competitive neural network

8) A 3-input neuron is trained to output a zero when the input is 110 and a one when the input is 111. After generalisation, the output will be zero when and only when the input is:
   a) 000 or 110 or 011 or 101
   b) 010 or 100 or 110 or 101
   c) 000 or 010 or 110 or 100
   d) Cannot determine

9) ~(For All(p)) = (there exists(_____))

10) Knowledge base

P U Q, ~P U R
=> _____

a) P U R
b) Q U R
c) P U Q
d) (~P) U (~Q) U (~R)

Scanned by TapScanner

RAJIV GANDHI UNIVERSITY OF KNOWLEDGE TECHNOLOGIES, BASAR
(A.Y. 2020-2021)
Computer Science and Engineering

Subject Name: **Operating Systems** Subject Code: **CS3101**
Date: 12-10-2021 Time: 120 Minutes
Exam: **E3/S1/REG** ID No: B161479 Max Marks: 60

SECTION - A [30M]

Note: Answer all the questions.

1. What is the objective of multiprogramming?
   A. Have a process running at all time
   B. Have multiple programs waiting in a queue ready to run
   C. To increase CPU utilization
   D. None of the mentioned
2. What is a medium-term scheduler?
   A. It selects which process has to be brought into the ready queue
   B. It selects which process has to be executed next and allocates CPU
   C. It selects which process to remove from memory by swapping
   D. None of the mentioned
3. When several processes access the same data concurrently and the outcome of the execution depends on the particular order in which the access takes place is called _____
   A. dynamic condition B. race condition
   C. essential condition D. critical condition
4. In multilevel feedback scheduling algorithm _____
   A. a process can move to a different classified ready queue
   B. classification of ready queue is permanent
   C. processes are not classified into groups
   D. none of the mentioned
5. With round robin scheduling algorithm in a time shared system _____
   A. using very large time slices converts it into First come First served scheduling algorithm
   B. using very small time slices converts it into First come First served scheduling algorithm
   C. using extremely small time slices increases performance
   D. using very small time slices converts it into Shortest Job First algorithm
6. Consider the following set of processes, the length of the CPU burst time given in milliseconds.

Process	Burst time
P1	6
P2	8
P3	7
P4	3

   Assuming the above process being scheduled with the SJF scheduling algorithm.
   A. The waiting time for process P1 is 3ms B. The waiting time for process P1 is 0ms
   C. The waiting time for process P1 is 16ms D. The waiting time for process P1 is 9ms
7. At a particular time of computation the value of a counting semaphore is 7.Then 20 P operations and 15 V operations were completed on this semaphore. The resulting value of the semaphore is?
   A. 42 B. 2
   C. 7 D.12
8. If a process is executing in its critical section, then no other processes can be executing in their critical section. What is this condition called?
   A. mutual exclusion B. critical exclusion
   C. synchronous exclusion D. asynchronous

Scanned by TapScanner

9. A system has 12 magnetic tape drives and 3 processes: P0, P1, and P2. Process P0 requires 10 tape drives, P1 requires 4 and P2 requires 9 tape drives.

Process	Maximum needs	currently allocated
P0	10	5
P1	4	2
P2	9	2

Which of the following sequence is a safe sequence?

A. P0, P1, P2
B. P1, P2, P0
C. P2, P0, P1
D. P1, P0, P2

10. Consider a virtual memory system with FIFO page replacement policy. For an arbitrary page access pattern, increasing the number of page frames in main memory will
A. Always decrease the number of page faults
B. Always increase the number of page faults
C. Sometimes increase the number of page faults
D. Never affect the number of page faults

11. Peterson's solution is restricted to _____processes that alternate execution between their critical sections and reminder sections?
A. One
B. Two
C. Three
D. Four

12. An asynchronous call _____
A. returns immediately, without waiting for the I/O to complete
B. does not return immediately and waits for the I/O to complete
C. consumes a lot of time
D. is too slow

13. The time taken for the desired sector to rotate to the disk head is called _____
A. positioning time
B. random access time
C. seek time
D. rotational latency

14. The dining – philosophers problem will occur in case of _____
A. 5 philosophers and 5 chopsticks
B. 4 philosophers and 5 chopsticks
C. 3 philosophers and 5 chopsticks
D. 2 philosophers and 5 chopsticks

15. There are 10 different processes running on a workstation. Idle processes are waiting for an input event in the input queue. Busy processes are scheduled with the Round-Robin time sharing method. Which out of the following quantum times is the best value for small response times, if the processes have a short runtime, e.g. less than 10ms?
A. tQ = 15ms
B. tQ = 40ms
C. tQ = 45ms
D. tQ = 50ms

SECTION-B(30M)

Note:
i. Answer any three, out of six questions.
ii. Answer all sub questions at one place.

1. a) Explain interprocess communication with diagram.(5M)
   b) Explain Best fit, First fit and worst fit allocation strategies with example. (5M)
2. a) Describe Peterson' s solution with piece of code (5M)
   b) Explain convoy effect and belady's anomaly.(5M)
3. a) Explain free space management in file. (5M)
   b) Explain Access matrix. (5M)
4. a) Explain deadlock prevention mechanisms. (5M)
   b) Explain safety algorithm with sample code. (5M)
5. a) Consider the page references 7, 0, 1, 2, 0, 3, 0, 4, 2, 3, 0, 3, 2, with 4 page frame. Fi
   number of page faults using optimal page replacement. (5M)
   b) Explain Process states with diagram. (5M)

Scanned by TapScanner

6. a) Suppose the requests to be addressed are-82, 170,43,140,24,16,190. And the Read/Write arm is at 50, and it is also given that the disk arm should move "towards the larger value". Calculate total head movement using SCAN disk scheduling algorithm. (5M)

b) There are six processes named as P1, P2, P3, P4, P5 and P6. Their arrival time and burst time are given below in the table. The time quantum of the system is 4 units. Plot Gantt chart, ready queue and Calculate completion time, turnaround time, waiting time, average turnaround time(5M)

Process ID	Arrival Time	Burst Time
1	0	5
2	1	6
3	2	3
4	3	1
5	4	5
6	6	4

Scanned by TapScanner

RAJIV GANDHI UNIVERSITY OF KNOWLEDGE TECHNOLOGIES, BASAR
(A.Y. 2020-2021)
Computer Science and Engineering

Subject Name: **Operating System**
Subject Code: CS3101
Exam: **E3S1 MT**

Date: 12/10/2021
Time: 30 Min
Max Marks: 20

Note: Answer all questions. Each question carries 2 marks

1. Which of the following process scheduling algorithm may lead to starvation
   A. FIFO B. Round Robin C. Shortest Job Next D. None of the above
2. The maximum number of processes that can be in Ready state for a computer system with n CPUs is
   A. n B. n^2 C. 2n D. Independent of n
3. Which one of the following is FALSE?
   A. User level threads are not scheduled by the kernel.
   B. When a user level thread is blocked, all other threads of its process are blocked.
   C. Context switching between user level threads is faster than context switching between kernellevel threads.
   D. Kernel level threads cannot share the code segment
4. In the Many to One model, if a thread makes a blocking system call :
   A. the entire process will be blocked
   B. a part of the process will stay blocked, with the restrunning
   C. the entire process will run
   D. None of these
5. A process is selected from the_____queue by the_____scheduler, to be executed.
   A. blocked, short term B. wait, long term C. ready, short term D. ready, long term
6. The file system NTFS stands for_____.
7. Consider a file system on disk that has both logical and physical block sizes of 512 bytes. Assume that the information about each file is already in memory. For each of the three allocation strategies, If we are currently at logical block 10 and want to access logical block 4, how many physical blocks must be read from the disk.
   A. Contiguous: 1; Linked: 4; Indexed: 2
   B. Contiguous: 2; Linked: 4; Indexed: 2
   C. Contiguous: 4; Linked: 4; Indexed: 1
8. Thrashing
   A. always occurs on large computers
   B. is a natural consequence of virtual memory systems
   C. can always be avoided by swapping
   D. can be caused by poor paging algorithms
9. A situation where several processes access and manipulate the same data concurrently and the outcome of the execution depends on the particular order in which access takes place is called:
   A. Race Condition B. Data consistency
   C. Starvation D. Aging
10. The operating system keeps the information of files in a table called
   A. File folder table B. File index table
   C. File allocation table D. Directory index table

Scanned by TapScanner

RAJIV GANDHI UNIVERSITY OF KNOWLEDGE TECHNOLOGIES BASAR

AY_2020-21_EST_E3_CSE_S1

Principles of Marketing

Subject Code: BM

Duration: 2 hours

Date: 27/09/2021

Max. Marks: 60

Part – I Objective Type Questions

Answer the following questions. Each question carries two marks. (15 ×2=30 Marks)

1. Idea screening is _____

   A) The third of the new product development process

   B) The second of the new product development process

   C) The first step of the new product development

   D) The last step of the new product development

   E) None of these

2. The final step of the new product development process is _____.

   A) Product development

   B) Test marketing

   C) Commercialization

   D) Marketing strategy and development

   E) None of these

3. In which step of the new product development process, the marketing mix is defined?

   A) Commercialization

   B)Concept development and testing

   C) Product development

   D) Marketing strategy and development

   E) None of these

4. In which step the new product development process, ideas become concepts that highlight key features, benefits and product image

   A) Idea generation

   B) Idea screening

   C) Concept development and testing

   D) None of these

5. In which step of the new product development process, a review of the sales, costs and profit projections for a new product to find out whether these factors satisfy the company's objectives.

   A) Business Analysis

   B) Idea screening

   C) Commercialization

   D) None of these

6. _____ is the course of a product's sales and profits over its life time.

   A) Product life cycle

   B) Consumer life cycle

   C) Market life cycle

   D) None of these

Scanned by TapScanner

7. In which stage of Product life cycle, the sales are zero and company's investments are high?

A) Growth stage
B) Product development stage
C) Saturation or maturity stage
D) None of these

8. If the new product is in introduction stage of PLC, the customers who purchase the product are_____.

A) Innovators
B) Early adopters
C) Middle majority
D) Laggards
E) None of these

9. If the product is in the growth stage of PLC, the customers who purchase the product are_____.

A) Middle majority
B) Laggards
C) Innovators
D) Early adopters
E) None of these

10. If the product is in the maturity stage of PLC, the customers who purchase the product are_____.

A) Middle majority
B) Early adopters
C) Innovators
D) Laggards
E) None of these

11. If the product is in the decline stage of PLC, the customers who purchase the product are_____.

A) Middle majority
B) Early adopters
C) Innovators
D) Laggards
E) None of these

12. Which pricing method keeps the highest price for a product in the beginning and slowly reduces the price in the long run?

A) Skimming price method
B) Penetration method
C) Product bundling method
D) None of these.

13. Which pricing method keeps the lowest price for the product in the the beginning to increase the market share?

A) Skimming price method
B) Penetration method
C) Product bundling method
D) None of these.

Scanned by TapScanner

14. Going rate pricing method belongs to

A) Cost oriented pricing method

B) Competition oriented pricing method

C) Marketing strategy based pricing method

D) None of these

15. The comany, suppliers and marketing intermediaries belong to_____ environment.

A) Micro environment

B) Macro environment

C) Both micro and macro environments

D) None of these.

Part – II Descriptive Questions

Answer any THREE of the following. All questions carry equal marks. (3×10 =30 Marks)

1. Briefly discuss the various philosophies of marketing.
2. Discuss the Stimulus- Response consumer behavior model with a suitable diagram.
3. What is a product? Explain the three layers of product with a neat diagram and with an appropriate example.
4. Write short notes on different pricing methods with suitable examples.
5. Explain the different levels of distribution channels with diagrams.
6. What is promotional mix? Explain the different components of promotional mix with suitable examples.

RAJIV GANDHI UNIVERSITY OF KNOWLEDGE TECHNOLOGIES BASAR

AY_2020-21_MT_E3_CSE_S1

Principles of Marketing

Subject Code: BM **Date: 27/09/2021**

Duration: 30 Minutes **Max. Marks: 20**

Answer all the questions. Each question carries two marks. **(10×2=20 Marks)**

1. _____ is a paid form of non- personal presentation of ideas, goods, or services by an identified sponsor.

A) Advertising

B) Publicity

C) Sales promotion

D) Personal selling

2. _____ is the presentation of a product to a prospective customer by a sales representative of an organization

A) Advertising

B) Publicity

C) Sales promotion

D) Personal selling

Scanned by TapScanner

3. _____ is the non-personal and non-paid communication about an organization /products/activities etc

A) Advertising
B) Publicity
C) Sales promotion
D) Personal selling

4. _____ activities help sales executives to induce potential customers by offering coupons, refund, free samples etc.

A) Advertising
B) Publicity
C) Sales promotion
D) Personal selling

5. What is "I" in AIDA principle of advertising?

A) Interest
B) Immunity
C) Investment
D) None of these
D) None of these.

6. _____ *is the actors close to the company that affect its ability to serve its target market.*

A) Micro environment
B) Macro environment
C) Both micro and macro environments
D) None of these.

7. *The study of human population, size, density, location, age, gender, race, occupation is called*_____

A) Demographic environment
B) Economic environment
C) Natural environment
D) None of these.

8. _____ consists of the forces that affect society's basic values, perceptions, preferences, and behaviors.

A) Demographic environment
B) Economic environment
C) Cultural environment
D) None of these.

9. Sealed bid pricing is _____

A) Cost oriented pricing method
B) Competition oriented pricing method
C) Marketing strategy based pricing method
D) None of these

10. Commodity bundling pricing method belongs to _____

A) Cost oriented pricing method
B) Competition oriented pricing method
C) Marketing strategy based pricing method
D) None of these

Scanned by TapScanner

B161479

RAJIV GANDHI UNIVERSITY OF KNOWLEDGE TECHNOLOGIES, BASAR

Subject Name: Object Oriented Programming structures through Java **Subject Code:** CS3102

Date: 28/09/2021 **Time:** 2 Hrs.

Exam: B.Tech_E3_CSE_S1_Regular **Max Marks:** 60

Section-A Descriptive Type[30 Marks]

Answer any Three Questions out of Six Questions. Each Sub Question Consists of 5 Marks

1. A.Explain the differences Procedural Oriented Programming Language and Object Oriented Programming Language

   B. Define Inheritance. What are different types of inheritance in Java with suitable syntax.

2. A. Differentiate between JDK Vs JRE Vs JVM with suitable diagram\
   B. Explain the Structure of Java Program concentrating over each Section in detail

3. A. Define Variable. Explain any two types of Variables in java with suitable Program
   B. Discuss about Java Selection statements with suitable syntaxes

4. A. What are the different ways of initializing Objects in java. Explain with suitable Program

   B. Define Constructor. What are the different type of constructors in java with suitable examples

5. A. Differences between String Class and String Buffer Class
   B. Write a Java Program to demonstrate the concept of Exceptional Handling concept using various keywords related to Exceptional Handling
6. A. Define Thread concept in Java alogn with Life-cycle of Thread with different Thread Stages

   B. Explain Seven Steps to JDBC, Importing java SQL Packages, Loading & Registering the drivers, Establishing connection. Creating & Executing the statement with suitable syntax

Section-B Objective Type[30-marks]

This section carries 30 Marks. Consists of 15 objective type questions each carry Two marks. There is no choice in this section.

1. Which was the name of first version of java
A) SUN B)OAK C)GREEN TEAM D)JAVA TEAM

2. What is the extension of the bytecode in java?
A) .java B) .class C) .bytecode D).jre

3. Which operator is used to perform bitwise inversion in java?

A) ~ B)! C) & D) |

4. Given a one-dimensional array arr, what is the correct way of getting its number of elements?

A)arr.length B) arr.length-1 C)arr.size D) arr.size-1

5. Which of the following statements are legal declarations and definitions of a method?

A) void method( ) { } B) void method(void) {}; C)method( ) {}; D) method(void) { };

Scanned by TapScanner

6.Trace the code ?

int values[ ] = {1,2,3,4,5,6,7,8,9,10}; for(int i=0;i< Y; ++i) System.out.println(values[i]);

Find the value of value[i]?

A. 10 B.11 C.15 D. None of the above

7.If a thread goes to sleep

A. It releases all the locks it has.
B. It does not release any locks.
C. It releases half of its locks.
D. It releases all of its lock except one.

8.What is the result of the following program?

```
public static synchronized void main(String[] args) throws
InterruptedException {
    Thread f = new Thread();
    f.start();
    System.out.print("A");
    f.wait(1000);
    System.out.print("B");
}
```

A. It prints A and B with a 1000 seconds delay between them
B. It only prints A and exits
C. It only prints B and exits
D. A will be printed, and then an exception is thrown.

9.In character stream I/O, a single read/write operation performs _____.

A. Two bytes read/write at a time.

B.Eight bytes read/write at a time.

C.One byte read/write at a time.

D.Five bytes read/ write at a time.

10. Which of the following is an immediate subclass of the Panel class?
A. Applet class B. Window class
C. Frame class D. Dialog class

11.Which of these classes are the direct subclasses of the Throwable class?
A. RuntimeException and Error class
B. Exception and VirtualMachineError class
C. Error and Exception class
D. IOException and VirtualMachineError class

12. Which is a component in AWT that can contain another components like buttons, textfields, labels etc.?

A. Window B. Container C. Panel D. Frame

Scanned by TapScanner

13. What is the output of this program?

package pkg; class output { public static void main(String args[]) {

StringBuffer s1 = new StringBuffer("Hello"); s1.setCharAt(1, x); System.out.println(s1); } }

A) xello B) xxxxx C) Hxllo D) Hexlo

14. Which of the following is a reserved keyword in Java?

A) Object B) strictfp C) main D) system

15. What is the output of this program?

class evaluate { public static void main(String args[]) { int a[] = {1,2,3,4,5};

int d[] = a; int sum = 0; for (int j = 0; j < 3; ++j)

sum += (a[j] * d[j + 1]) + (a[j + 1] * d[j]); System.out.println(sum);} }

A) 32 B) 38 C) 40 D) 45

RAJIV GANDHI UNIVERSITY OF KNOWLEDGE TECHNOLOGIES, BASAR

Subject Name: Object Oriented Programming structures through Java
Date: 28 /09/2021
Exam: B.Tech E3 S1 Regular

Subject Code: CS3102
Time: 30 Mins.
Max Marks: 20

Mid-Term Examination
Section-A Objective Type[20-marks]

Each question carries Two marks. There is no choice in this section. Attempt all the questions

1. Java is an _____ computer-programming language.

A. Object-oriented B. Class-based C. Concurrent & Secured D. All the Above

2. What should be the execution order, if a class has a method, static block, instance block, and constructor, as shown below?

```
public class First_C
{
    public void myMethod()
    {
        System.out.println("Method");
    }
    {
        System.out.println(" Instance Block");
    }
    public void First_C()
    {
        System.out.println("Constructor ");
    }
    static
    {
        System.out.println("static block");
    }
    public static void main(String[] args)
    {
        First_C c = new First_C();
        c.First_C();
        c.myMethod();
    }
}
```

Con
Me
Ins

Scanned by TapScanner

A. Instance block, method, static block, and constructor
B. Method, constructor, instance block, and static block
C. Static block, method, instance block, and constructor
D. Static block, instance block, constructor, and method

3. If only one memory location is to be reserved for a class variable, no matter how many objects are instantiated, then the variable should be declared as
A. extern B. static C. volatile D. const

4. Object Oriented inheritance models:
A. "is a kind of" relationship B. "has a" relationship
C. "was a" relationship D. "consists" relationship

5. The \u0021 article referred to as a
A. Unicode escape sequence B. Octal escape C. Hexadecimal D. Line feed

6. Evaluate the following Java expression, if x=3, y=5, and z=10:

++z + y - y + z + x++

A. 24 B. 23 C. 20 D.25

7. What will be the output of the following program?

```
public class Test
{
    public static void main(String[] argsss)
    {
        int count = 1;
        while (count <= 15)
        {
            System.out.println(count % 2 == 1 ? "***" : "+++++");
            ++count;
        }       // end while
    }       // end main
}
```

A. 15 times *** B. 15 times +++++ C.8 times *** and 7 times +++++ D. Error

8. Which of the following tool is used to generate API documentation in HTML format from doc comments in source code?
A. javap tool B. javaw command C. Javadoc tool D. javah command

9. Which keyword is used for accessing the features of a package?
A. Package B. import C.extends D. export

10. How many threads can be executed at a time?
A. Only one thread B. Multiple threads C.Only main (main() method) thread D. Two threads

******ALL THE BEST***

Scanned by TapScanner

B161479

RGUKT-BASAR
RAJIV GANDHI UNIVERSITY OF KNOWLEDGE TECHNOLOGIES, BASAR
(A.Y. 2020-2021)

Subject: Soft Skills | **REGULAR** | **Subject Code: HS3101**
Date: 07 /10 /2021 | **(CSE)** | **Time: 2 Hours**
Exam: E3S1 | | **Max Marks: 60**

SECTION A

Each question carries TWO marks. (15X2= 30)

1. Effectively presenting your thought and ideas, verbally and in writing.
   a. Teamwork
   b. Communication
   c. perseverance
   d. respect

2. Non-verbal communication includes
   a. Smiling
   b. Facial expressions, body language and posture
   c. hand gestures
   d. standing straight

3. Working without being told, being self-motivated, and being the first to begin work shows…
   a. Motivation
   b. Leadership
   c. initiative
   d. persistence

4. Having a positive outlook can affect your
   a. Performance
   b. Health
   c. confidence
   d. all of the above

5. What is teamwork?
   a. The ability to do something without being asked.
   b. The ability to get people to do what you want.
   c. The ability to work with others to get the job done.
   d. The ability to clearly express yourself.

6. Teamwork involves which one of these?
   a. Building relationships
   b. Important skills and experiences
   c. working with other people
   d. all of the above

7. Making use of your personal connections to achieve your career goals
   a. Networking
   b. Collaboration
   c. teamwork
   d. all of the above

8. In active listening, you should always maintain _____ contact.
   a. Hand
   b. Feet
   c. arm length
   d. eye

9. Using your cell phone at work is probably okay because everyone has one.
   a. True
   b. false

Scanned by TapScanner

10. It is important to read all directions before starting a task.
    a. True
    b. false

11. Which of the following is not a soft skill?
    a. Professionalism
    b. Time management skills
    c. communication skills
    d. typing skills

12. Arriving or doing something at the expected or planned time is _____
    a. Punctuality
    b. Character
    c. attendance
    d. self-discipline

13. You are a person with a with high level of _____ if you stand by your values even if others put pressure on you to do something that is wrong or if they make fun of you.
    a. Communication
    b. Honesty
    c. cooperation
    d. integrity

14. Before your interview _____ the company.
    a. Prepare
    b. Call
    c. research
    d. visit

15. A person works for someone or a company
    a. Demonstrator
    b. Employer
    c. employee
    d. employability

SECTION B

Each question carries 10 marks.

Answer any THREE questions. (3X10=30)

1. Mention 10 'Do's and Don'ts' of a group discussion.
2. What are the characteristics of a Good Presentation?
3. Highlight five of your strongest soft skills in a job search.
4. Describe an experience when you had to solve a problem in a crisis.
5. Write 10 features of a Resume and explain using its importance with examples.
6. Frame 10 smart and relevant questions that can be asked while interviewing for the post you applied. (mention the post for which you are applying)

Scanned by TapScanner

Student ID: B161479

RAJIV GANDHI UNIVERSITY OF KNOWLEDGE TECHNOLOGIES, BASAR
(A.Y. 2020-2021)
Computer Science and Engineering

Subject Name: Signals &Systems
Exam: MT
Max Marks: 20M

Code:EC3106
Date: 08/10/2021
Time: 30Min

Note : Attempt all the MCQ's , each question carries 2 Mark

1. **A signal is a power signal if**

a) P=Finite, E=Zero b) P=Finite, E=infinite c) P=Finite, E= Finite d) P= infinite, E= infinite

2. **A system whose outputs depends on future inputs**

a) Static system b) Dynamic System c) both b & d d) Non-casual System

3. **Sequence1: [1 2 3 4], Sequence2: [1 1 -1 1] , Find discrete convolution?**

a) [1 3 4 6 3 -1 4] b) [1 3 6 4 3 -1 4] c) [1 4 3 6 -1 3 4] d) [1 3 4 6 3 1 1 4]

4. ***The input and output of a continuous system are respectively denoted by x(t) and y(t). Which of the following descriptions corresponds to a causal system?***

a) $y(n) = 2\,x(2-t) + 3\,x(t-3)$
b) $y(t) = 2\,x(2+t) + 3\,x(t-3)$
c) $y(n) = 2\,x(t+3) + 3\,x(t-3)$
d) $y(n) = 2\,x(t) + 3\,x(t-3)$

5. **Fourier series , Fourier transforms applicable to**

a) Only periodic signals, periodic & aperiodic signals
b) Former is Periodic signals only, later is aperiodic signals only
c) Any random signals
d) Both periodic signals and aperiodic signals

6. ***IFT of $\delta(\omega-\omega 0)$ is***

a) $\frac{1}{2\pi}e^{j\omega 0t}$ b) $\frac{1}{2\pi}e^{-j\omega 0t}$ c) $2\pi e^{j\omega 0t}$ d) $2\pi e^{-j\omega 0t}$

7. **ROC of $L[te^{-2t}]$ is**

a) Re(s) < -2 b) 0< Re(s) < 2 c) Re(s) > -2 d) -2 <Re(s) <0

Scanned by TapScanner

8. ILT of $\frac{2s+4}{(s+1)(s+3)}$

a) $2e^{-2t}cosht$

b) $2e^{-t} - e^{-3t}$

c) $2e^{-2t}sinht$

d) $2e^{-t}cos0.5t$

9. Z-Transform of $x(nT) = a^{nT}\, u(nT)$ is

a) $\frac{z}{z-a^T}$

b) $\frac{z}{z-a^{nT}}$

c) $\frac{z}{z+a^T}$

d) $\frac{z}{z-a}$

10. Nyquist rate for the signal $x(t)=5\sin(200\pi t) + 8\cos(500\pi t)$ is

a) 500 Hz

b) 700 Hz

c) 300 Hz

d) 200 Hz

Scanned by TapScanner

B161479

RAJIV GANDHI UNIVERSITY OF KNOWLEDGE TECHNOLOGIES, BASAR
(A.Y. 2020-2021)
Computer Science and Engineering

Subject Name: Signals & System Design
Time: 2 Hours
Exam: E3_SEM1_EST

Code: EC3106
Max Marks: 60
Date: 08/10/2021

Note: Attempt any 3 out of 6 questions in part A, each Question carries 10Marks
Attempt all the MCQ's in part B, each question carries 2Marks

PART A [30 Marks]:

1. a) For the signal x(t) given, find x(t-3), x(t+3), x(2t), x(-t+2) and x(-t-2)? [5M]

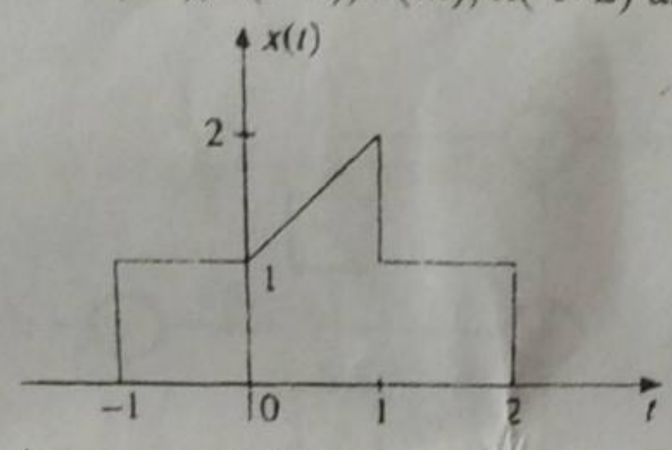

b) State whether the following system is linear, casual, time invariant, stable [5M]
$y(n)+y(n-1) = x(n)+x(n-2)$ and $y(n) = nx(n)+x(n-4)+y(n-6)$

2. a) Find the convolution for x[n]={0.5,2,0,0,0}and h[n]={1,1,1,0,0} by waveforms? [5M]
b) The system represented by $4y[n] - 4y[n-1] + y[n-2] = 2x[n] - x[n-1]$ for $x[n] = u[n]$, Find the complete solution, assuming that the system is at initial rest (i.e. $y[-1] = y[-2] = 0$) [5M]

3. a). Derive and explain convolution property and Duality property of CTFT [5M]
b). Find the Magnitude and phase spectrum for x(t) using CTFT [5M]

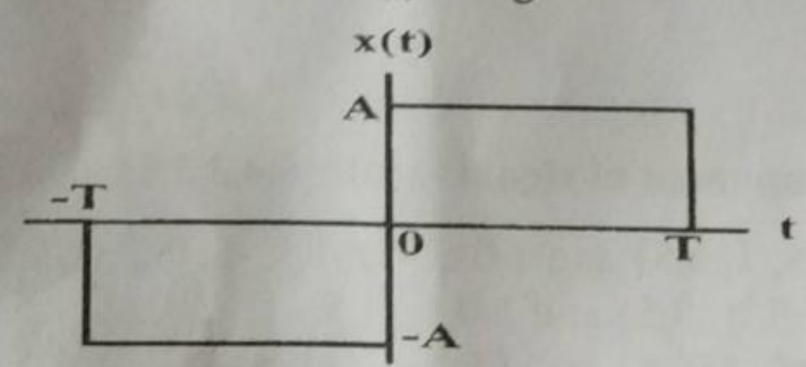

4. a) Determine LT for x(4t) if $X(s) = \frac{4s}{s^2-4}$?
Find initial and final values for $X(s) = \frac{1}{s-4}$, $X(s) = \frac{s-2}{s(s+4)}$? [5M]

b) Find inverse Z-transform of $\frac{z(z-1)}{(z+1)^3(z+2)}$; ROC: $|z| > 2$ [5M]

Scanned by TapScanner

5. The following sampling and reconstruction block is given, the output of the given reconstruction filter can be found by sending $x_s(t)$ through an LPF which is also shown; for the signal $x(t)=2+\cos(30\pi t)+2\cos(60\pi t)$ for T=0.02sec, Draw expression for $|X_s(\omega)|$ and find expression for x(nT), y(t) [10M]?

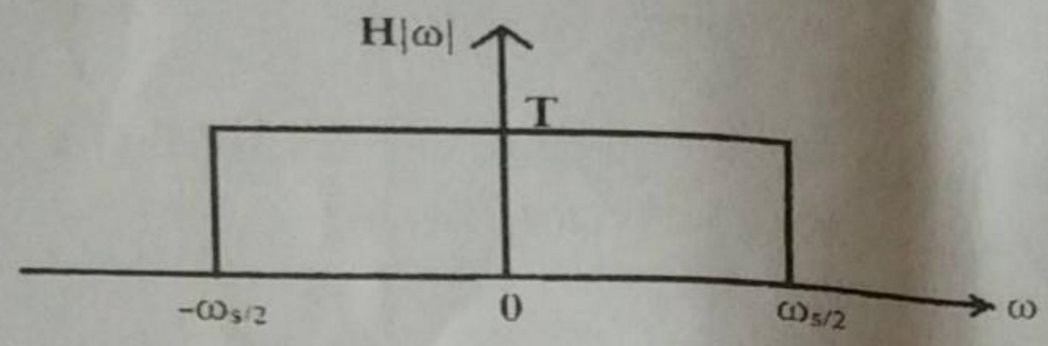

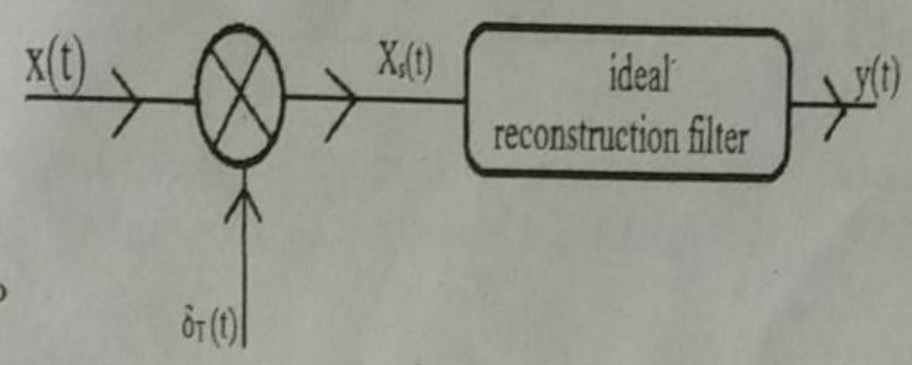

6. a) Find impulse and step response of the system whose transfer function is $H(s)=\frac{s+3}{s^2+6s+8}$ [5M]

b) If x[n] = u[n] find y[n]? [5M]

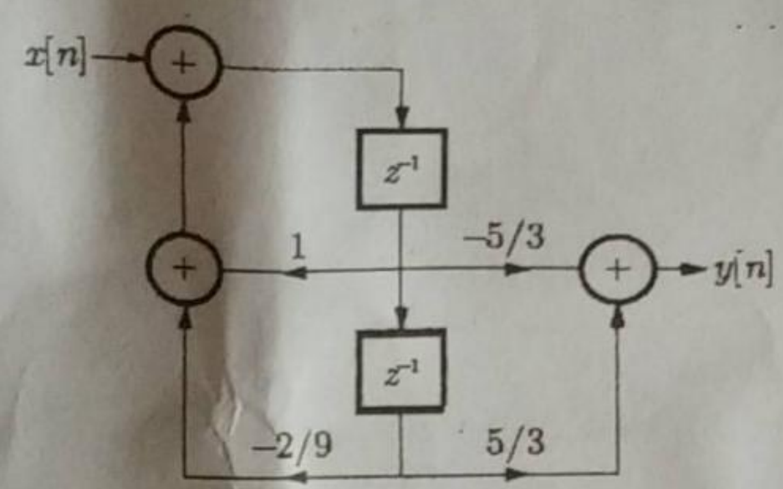

PART B [30 Marks]:

1. $\int_{-\infty}^{+\infty} x(\tau)\delta(t-\tau)d\tau =$

   A. x(t-τ)
   B. x(t)δ(t)
   C. x(τ)
   D. x(t)

2. **Find the even and odd component of signals x(n)={5,4,3,2,1}**

   A. {0.5, 1, 1.5, 2, 5, 2, 1.5, 1, 0.5} and {-0.5, -1, -1.5, -2, 0, 2, 1.5, 1, 0.5}
   B. {0.5, 1, 1.5, -2, 5, 2, 1.5, 1, 0.5} and {-0.5, -1.5, -1, -2, 0, 2, 1.5, 1, 0.5}
   C. {0.5, 1.1, 5, -2, 5, 2, 1.5, 1.0, 5} and {-0.5, -1, -1.5, -2, 0, 2, 1.5, 1, 0.5}
   D. {0.5, 1, 1.5, 2, 5, 2, 1.5, 1, 0.5} and {-0.5, -1.5, -1, -2, 0, 2, 1.5, 1, 0.5}

3. **For a periodic signal v (t) = 30 sin100 t + 10 cos300t + 6 sin (500 t +π /4) the fundamental frequency in rad/s is?**

   A. 300 B. 100 C. 1500 D. 500

Scanned by TapScanner

4. **Find the homogenous solution for the O.D.E** $\frac{d^2y(t)}{dt^2}+4\frac{dy(t)}{dt}+3y(t)=e^{-2t}, \quad t\geq 0, \quad y(0)=1, \quad \frac{dy(0)}{dt}=1$

A. $-e^{-2t}$
B. $2.5e^{-t}-0.5e^{-3t}$
C. $2.5e^{-t}-0.5e^{3t}$
D. $2.5e^{t}-0.5e^{3t}$

5. **If the space model representation of the system is $\dot{X}=Ax+Bu$, $Y=Cx+Du$, what is A?**

A. Coefficient matrix
B. Driving matrix
C. Output matrix
D. Transmission matrix

6. **The impulse response of the given system is obtained by**

A. Differentiating unit ramp response
B. integrating unit ramp response
C. integrating unit step response
D. Differentiating unit step response

7. **Frequency domain representation of a signal graphically is**

A. spectrum
B. waveform
C. timing diagram
, D. magnitude and phase plot

8. **FT $[a^n u(n)]$?**

A. $\frac{1}{1-ae^{j\omega}}$

B. $\frac{1}{1-ae^{-j\omega}}$

C. $\frac{1}{1-ja\omega}$

D. $\frac{1}{1+ja\omega}$

9. **The equation for trigonometric Fourier series is?**

A. $x(t)=a_0+\sum_{n=0}^{\infty}(a_n\cos n\omega_0 t+b_n\sin n\omega_0 t)$
B. $x(t)=a_0+\sum_{n=1}^{\infty}(a_n\cos n\omega_0 t+b_n\sin n\omega_0 t)$
C. $x(t)=a_0+\sum_{n=1}^{\infty}(a_n\cos n\omega_0 t-b_n\sin n\omega_0 t)$
D. $x(t)=a_0+\sum_{n=0}^{\infty}(a_n\cos n\omega_0 t-b_n\sin n\omega_0 t)$

10. **Which among the following is true?**

A. all the given
B. ROC contains strip lines parallel to jω axis in s-plane
C. For a system to be causal, all poles of its transfer function must be right half of s-plane
D. A system is said to be stable when all poles of its transfer function lay on the left half of s-plane.

Scanned by TapScanner

11. **ROC of the Z Transform of sequence $\left(\frac{4}{5}\right)^n u(n) - \left(\frac{5}{4}\right)^n u(n)$ must be**

A. $|z| < \frac{4}{5}$ B. $|z| > \frac{4}{5}$ C. $\frac{5}{4} < |z| < \frac{4}{5}$ D. $\frac{4}{5} < |z| < \frac{5}{4}$

12. **Underline indicates reference '0', Given IZT of $2 + 3z^{-1} + 4z$, the coefficients are**

A. [4 $\underline{2}$ 3] B. [3 4 $\underline{2}$] C. [$\underline{2}$ 3 4] D. [3 $\underline{2}$ 4]

13. **The Nyquist interval for the signal $x(t) = \frac{\cos(500\pi t)}{\pi t}$ is?**

A. 500s B. 0.002s C. 0.001s D. 0.5s

14. **Let $x(t) = \cos(10\pi t) + \cos(30\pi t)$ be sampled at 20 Hz and reconstructed using an ideal low-pass filter with a cut-off frequency of20 Hz. The frequency/frequencies present in the reconstructed signal is/are?**

A. 5 Hz, 10 Hz and 15 Hz only
B. 5 Hz only
C. 5 Hz and 15 Hz only
D. 10 Hz and 15 Hz only

15. ***A band limited signal having no frequency components higher than f_m hertz can be sampled if its sampling freq f_s is***

A. equal to or greater than Nyquist rate.
B. greater than Nyquist rate.
C. less than or equal to Nyquist rate
D. A & B

Scanned by TapScanner

RAJIV GANDHI UNIVERSITY OF KNOWLEDGE TECHNOLOGIES, BASAR

B161338

(A.Y. 2020-2021)

Computer Science and Engineering

Subject Name: Information Security
Exam: E3S2_IS_EST
Date: 12/11/2021

Subject code: IS
Max Marks: 60
Time: 2hrs

SECTION-A

Answer any three (3) questions out of 6 questions, Each question carries 10 **10*3=30 Marks.**

1. a) explain the Security Services in brief?(4M)
   b) write active attacks and passive attacks in detail(6M)
2. a)Explain any Block cipher modes of operation with diagram (4M)
   b)Explain feistel cipher structure with block diagram (6M)
3. a) Draw and explain the AES block diagram(5M)
   b) What is MAC ?how to achieve confidentiality and authentication with diagram(5M)
4. a) Generate public key and private key in case of RSA algorithm if two prime numbers p=5 and q=7(5M)
   b)what is symmetric and asymmetric encryption? how to achieve the confidentiality and authentication with asymmetric encryption/decryption? (5M)
5. a)explain the PGP services in detail?(5M)
   b)what are the ways to distribute the public keys, explain briefly?(5M)
6. a)what is firewall? explain the types of firewalls(6M)
   b)what is Dual signature? Explain it with diagram (4M)

SECTION-B

Answer all the questions(30 Marks)

1. Lack of access control policy is a _____**(1M)**

a) vulnerability b)threat c)attack d)bug

2. the DSS signatures uses which Hash Algorithm**(1M)**

a)MD5 b)MAC c)SHA-1 d)none

3. the certificate_request message includes two parameters one of which is**(1M)**

a) certificate_extension
b) certificate_creation
c) certificate_exchange
d) certificate_type

4. In the Handshake protocol which is the message type first sent between client and server**(1M)**

a) Server_hello b) Client_hello c)Hello_request d) Certificate_request

Scanned by TapScanner

5. what is the sequence of a TCP connection(**1M**)

a) SYN-ACK-FIN b) SYN-SYN ACK-ACK c) SYN-ACK d) SYN-SYN-ACK

6. Which of the following refers to the violation of the principle if a computer is no more accessible?(**1M**)

a) Access control b) Confidentiality c) Availability d)All of the above

7. Which one of the following refers to the technique used for verifying the integrity of the message?(**1M**)

a) Digital signature b)Decryption algorithm c)Protocol d)MessageDigest

8. Data Encryption Standard is an example of a which cryptosystem.(**1M**)

a)conventional b)public_key c)hash_key d) asymmetric-key

9. Which of the plain-text is processed 1-bit at a time & a series of actions is carried out on it for generating one bit of cipher-text(**1M**)

a)BlockCipher
b)One-timepad
c)Streamcipher
d) Vigenere Cipher

10. How many rounds does the AES-192 perform(**1M**)

a)10 b)12 c)14 d) 16

11.What is the key size in the S-AES algorithm?(**2M**)

a)16bits
b)32bits
c)24bits
d) None of the mentioned

12. Pretty Good Privacy (PGP) is used in(**2M**)

A)Browser security B)FTP security C)Email security D)None of the above

13. Which of the following is /are offered by the Hash functions?(**2M**)

a. Authentication
b. Non repudiation
c. Data Integrity
d. All of the above

14.Which of the following are used to generate a message digest by the network security protocols?(**2M**)

Scanned by TapScanner

(P) RSA

(Q) SHA-1

(R) DES

(S) MD5

a) P & R b)Q &R c)Q&S D)R &S

15. A sender is employing public key cryptography to send a secret message to a receiver. Which one of the following statements is TRUE? **(2M)**

a)Sender encrypts using receiver's public key

b)Sender encrypts using his own public key

c)Receiver decrypts using sender's public key

d)Receiver decrypts using his own public key

16) A digitally signs a message and sends it to S. Verification of the signature by S requires**(2M)**

a)A's public key.

b)S's public key.

c)S's private key.

d)A's private key

17. How many of the above statements are true?**(2M)**

S1- MD5 is vulnerable to the Birthday attack.

S2- trace route uses the "Destination port unreachable" ICMP error message.

S3- 3DES is a type of Public Key Encryption Algorithm.

S4- IPv6 has a 40-byte fixed header size(without Options fields).

a)2 b)3 c)4 d)None of these

18. In a system an RSA algorithm with p=5 and q=11, is implemented for data security. What is the value of the decryption key if the value of the encryption key is 27? **(2M)**

a)3 b)7 c)27 d)40

Scanned by TapScanner

19.AES uses a _____ bit block size and a key size of _____ bits.(2M)

a)128; 128or256

b)64; 128or192

c)256; 128,192,or256

d) 128; 128, 192, or 256

20.Using public key cryptography, X adds a digital signature σ to a message M, encrypts (M,σ) and sends it to Y, where it is decrypted. Which one of the following sequence of keys is used for operations? **(2M)**

a)Encryption : X's private key followed by Y's private key. Decryption : X's public key followed by Y's public key.

b)Encryption : X's private key followed by Y's public key; Decryption : X's public key followed by Y's private key

c)Encryption : X's private key followed by Y's public key; Decryption : Y's private key followed by X's public key.

d) Encryption : X's public key followed by Y's private key; Decryption : Y's public key followed by X's private key.

Scanned by TapScanner

RAJIV GANDHI UNIVERSITY OF KNOWLEDGE TECHNOLOGIES, BASAR
(A.Y. 2020-2021)

Subject: Compiler Design
Subject Code: CS3201
Exam: E3/SEM2/CSE/EST

B161174

Date: 09/11 /2021
Time: 120Min
Max Marks: 60

SECTION –A (30M)

NOTE:

All bits are compulsory, there is NO choice in Section-A.

****

1. The grammar A→AA|(A)|ε is not suitable for predictive parsing. Because grammar is_____.
   a) Left recursive b)Left factored c)Right recursive d)None

2. Symbol table is created during ___ phase.
   a) Syntax analysis b) Lexical analysis c)Semantic analysis d)All of the above.

3. _____ is an invalid three address code.
   a)Quadruple b)Triple c)Threaded code d)Indirect triple.

4. DAG stands for_____
   a)Directed adjacent graph b)Double adjacent graph
   c)Double acyclic graph d) Directed acyclic graph

5. Which of the following is peephole optimization?
   a)common sub expression elimination b)flow of control optimization
   c)Loop jamming d)none.

6. To apply global redundant sub expression elimination _____ gives the required information.
   a) syntax analysis b) data flow analysis c)lexical analysis d)none.

7. Consider the SDT given below.
   S→aSb{S.count=S.count+2}
   |bSa{S.count=S.count+2}
   |ε{S.count=0}
   This SDT checks_____.
   a)total number of a's b)total number of b's
   c)total number of a's and b's d)none

Scanned by TapScanner

8. We cannot convert an L-attributed definition to S-attributed definition.[Yes/No]

9. Find the number of tokens in the following code

```
int max(int x', int y){
/* find max */
return(x>y?x:y);}
```

a)21 b)22 c)25 d)26

10.___is an automated tool for scanners.

a)LEX b)FLEX c)both 'a' and 'b' d)YACC

11.Which of the following derivation does a top down parser use while parsing an input string? The input is assumed to be in LR order.

a)LMD b)Leftmost traced out in reverse

c)RMD d)Rightmost traced out in reverse

12.For the grammar $A \rightarrow A\alpha | \beta$ equivalent grammar without left recursion is_____.

13.Is every LL(1) unambiguous?[Yes/No]

14.The SDT $A \rightarrow BC\{C.s=B.s;\}$ is ____

a)S-attributed b)L-attributed c)both d)none.

15.Write type expression for an array of pointer to int ,where array index ranges from 1 to 100.

SECTION – B(30M)

Answer any three questions. Each question carries 10 marks.

1. Construct the predictive parsing table for the following grammar.

$E \rightarrow TE`$

$E` \rightarrow +TE` | \varepsilon$

$T \rightarrow FT`$

$T` \rightarrow *FT` | \varepsilon$

$F \rightarrow (E) | id$

2. Check whether the following grammar is SLR or not.

$E \rightarrow T+E$

$E \rightarrow T$

$T \rightarrow a$

Scanned by TapScanner

3. Construct CLR parsing table for the following grammar.

   $S \rightarrow AA$

   $A \rightarrow aA|b$

4. Write SDT to count number of digits in a binary number.

   (Ex:number of digits in "1010" is:4)

5. Convert the following expression into Postfix notation and write the three address code.

   a*(b+c)/(d/e)

6. Using register allocation method generate the target code for the following expression.

   a/(b+c)-d*(e+f)

Scanned by TapScanner

B161583

RAJIV GANDHI UNIVERSITY OF KNOWLEDGE TECHNOLOGIES, BASAR

(A.Y. 2020-2021)

Computer Science &Engineering

Subject: Computer Networks
Date: 11/11/2021
Exam: E3SEM2EST

Subject Code: CS3202
Time: 2Hrs
Max Marks: 60

Section A

Instructions:

- Answer all the questions
- **Questions from 1 to 10 carries 1 mark each and Questions from 11 to 20 carries 2 marks each**

1. What kind of transmission medium is most appropriate to carry data in a computer network that is exposed to electrical interferences?
   A) Unshielded twisted pair
   B) Optical fiber
   C) Coaxial cable
   D) Microwave

2. In OSI model, when data is sent from device A to device B, the 5th layer to receive data at B is _____
   A) Application layer
   B) Transport layer
   C) Link layer
   D) Session layer

3. Which of the following device is used to connect two systems, especially if the systems use different protocols?
   A) Repeater B) Gateway C) Bridge D) Hub

4. The physical layer is concerned with _____
   A) Bit-by-bit delivery
   B) Process to Process delivery
   C) Application to application delivery
   D) Port to port delivery

5. Which of the following address belongs class A?
   A) 121.12.12.248
   B) 130.12.12.248
   C) 128.12.12.248
   D) 129.12.12.248

6. The protocol data unit (PDU) for the application layer in the Internet stack is
   A) Segment B) Datagram C) Packet D) Message

7. What is the speed of a 100BaseT cable?
   A) 10 Mbps B) 100 Mbps C) 1 Gbps D) None

8. Which one of the following algorithm is not used for congestion control?
   A) Traffic aware routing
   B) Admission control
   C) Load shedding
   D) Routing information protocol

9. . "Parity bits" are used for which of the following purposes?
   A) Encryption of data
   B) To transmit faster
   C) To detect errors
   D)To identify the sender

Internet Control Msg Prot

Scanned by TapScanner

10. What are the Methods to move data through a network of links and switches?
A) Packet switching and Line switching
B) Circuit switching and Line switching
C) Line switching and bit switching
D) Packet switching and Circuit switching

11. The length of an IPv6 address is?
A) 32 bits
B) 64 bits
C) 128 bits
D) 256 bits

12. ICMP is primarily used for
A) Error and diagnostic functions
B) Addressing
C) Forwarding
D) Routing

13. Which of the following tasks is not done by data link layer?
A) Framing
B) Error control
C) Flow control
D) Channel coding

14. What is the size of the sender window in the Go Back N (ARQ) protocol?
A) 0
B) 1
C) 10^n
D) n

15. What is the meaning of Carrier Sense in CSMA (Carrier Sense Multiple Access)?
A) The ability to check the shared transmission medium whether it is being used by any other node or not
B) The ability to restrict other nodes to access the shared medium
C) The ability to gain access to the shared medium
D) None

16. In the IPv4 addressing format, the number of networks allowed under Class C addresses is
A) 2^{14}
B) 2^{7}
C) 2^{21}
D) 2^{24}

17. The message 11001001 is to be transmitted using the CRC polynomial x^3 + 1 to protect it from errors. The message that should be transmitted is:
A) 11001001000
B) 11001001011
C)11001010
D) 110010010011

18. Count-to-Infinity problem occurs in
A) Distance vector routing
B) Shortest path first
C) Link state routing
D) Hierarchical routing

19. Consider different activities related to email:
m1: Send an email from a mail client to a mail server
m2: Download an email from mailbox server to a mail client
m3: Checking email in a web browser
Which is the application level protocol used in each activity?
A) m1: HTTP, m2: SMTP, m3: POP
B) m1: SMTP, m2: FTP, m3: HTTP
C) m1: SMTP, m2: POP, m3: HTTP
D) m1: POP, m2: SMTP, m3: IMAP

20. A network using CSMA/CD has a bandwidth of 10 Mbps. If the maximum propagation time (including the delays in the devices and ignoring the time needed to send a jamming signal, as we see later) is 25.6 μs, what is the minimum size of the frame?
A) 128 bytes
B) 32 bytes
C) 16 bytes
D) 64 bytes

Scanned by TapScanner

Section B

Instructions:

- Answer any 3 questions
- Each question carries 10 Marks

1. A) Explain the layers and their functionalities in ISO OSI reference model 5M
   B) What isa sliding window protocol? Explain Go-back-N and Selective repeat Protocols 5M

2. A) Draw the 802.3 MAC frame and explain the purpose of each field. Discuss about the minimum and maximum frame lengths. 5M
   B) Explain CSMA/CD with the help of flowchart. 5M

3. A) What is distance vector routing algorithm? Consider thebelow network and explain the process of dynamically updating routing tables. 6M

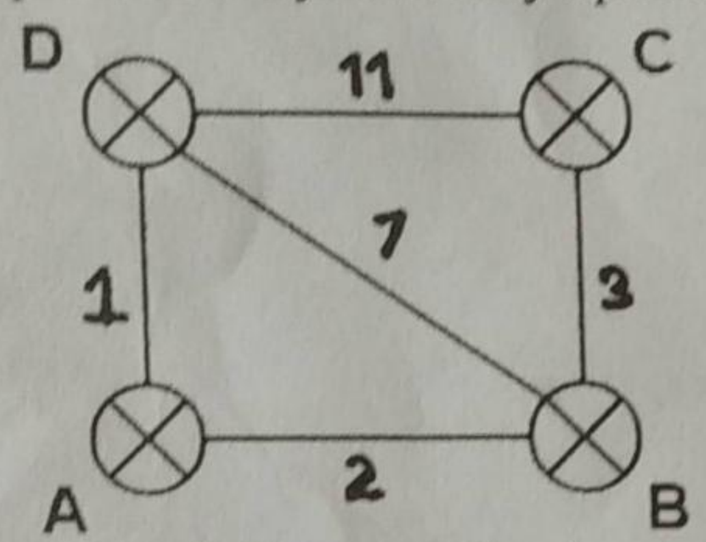

   B) Explain connection less and connection oriented services provided by network layer. 4M

4. A) Explain IPV4 addressing in detail. 5M
   B) What is the purpose of packet fragmentation in networks? Explain the process of fragmentation and defragmentation. 5M

5. A) Explain TCP header in detail. 5M
   B) Write a brief note on the following protocols. Also give a real world example of their usage 5M
   i) DNS ii) FTP

6. Describe the following in detail
   A) Guided Transmission Media 5M
   B) Learning tree bridges and Spanning tree bridges 5M

----------END OF THE PAPER----------

Scanned by TapScanner

RAJIV GANDHI UNIVERSITY OF KNOWLEDGE TECHNOLOGIES, BASAR
(A.Y. 2020-2021)

B161479

Department of Management BRANCH: E3 CSE

Subject Name: PERSONALITY DEVELOPMENT code: BM0004
Date: 20/11/2021 Time: 120 Min

Exam: E3S2EST Max Marks: 60

NOTE: Please write precisely and to the point. Credit will be given for neatness, cleanness and the way of presentation. Focus would be on learning imparted.

i) (You are free to showcase your knowledge, understanding and Creativity for below questions ; Use common sense method!)
ii) Assume suitable data and assumptions wherever necessary, if you have your assumption then mention and highlight it)
iii) Quality of the answer not the quantity will be judged
iv) Don't try to increase the unnecessary length of answer. Be short and sweet (answer not more than 3 pages or otherwise mentioned in the question. **It will be penalised**)
v) Start each main question on separate page

SECTION –A Objective Part (30M) 15 questions each carry 2 M

1. O in SWOT analysis means
A Opportunity B Ownership
C Optimism D All above

2 A in SMART goal settings means

A Autocratic B Achievable
C Attractive D Alternative

3 Which motivation is important
A Internal B External
C Both D None

4 Our personality is a reflection of which dimensions
A Physical B Mental
C Spiritual D All

5 Hierarchy of Need theory of Motivation is given by -------
A Maslow B Herzberg
C Douglus Mcgregor D Johnson

6 XY theory of Motivation is given by -------
A Maslow B Douglus Mcgregor
C Herzberg D Johnson

7 What is true regarding Goal Settings?
A only long term goal setting is important
B only short term goal setting is important
C Both short term and long term goal setting is important
D None is important

8. What factors influence our attitude?
A Surroundings B Education
Personal D All

Scanned by TapScanner

9 Adolf Hitler is example of ---- Leadership

A Autocratic
B Democratic
C Free reign
D None of above

10 Hygiene theory of Motivation is given by -------

A Maslow
B Herzberg
C Douglus Mcgregor
D Johnson

11 In general, CEO of corporate companies is example of ---- Leadership

A Autocratic
B Democratic
C Free reign
D None of above

12. Manners need to be showcased in ----

A Social life
B Official life
C family life
D All above

13 Communication plays important role in conflict management

A True
B False

14 Indian prime Minister is example of ---- Leadership

A Autocratic
B Democratic
C Free reign
D None of above

15 Which leadership style is better

A Autocratic
B Democratic
C Free reign
D Combination of all

SECTION –B (30M) Descriptive Part:

3 Questions need to be answered out of 6 questions. Each Question carries 10 Marks.

Q1) Brain plays a vital role in our personality. Do you agree? Justify in brief. Write 5 things to improve your brain so that the improved brain would improve your personality.

Q2.Explain Democratic and Autocratic Leadership Styles in detail with examples

Q3) Imagine you are going to participate in Techefest2022 in IIT Bombay for working model in robotics. You are representing RGUKT. Write an application to seek permission and sponsorship of 10000/- from administration.

Q4. Do a SWOT analysis of yourself .

Q5 what is your short term goal? Why? How will you achieve it?
what is your middle term goal? Why ? How will you achieve it?
what is your long term goal? Why ? How will you achieve it?

Q6. Explain Maslow's motivation theory and relate it to your life.

The END

Scanned by TapScanner

RAJIV GANDHI UNIVERSITY OF KNOWLEDGE TECHNOLOGIES, BASAR
RGUKT – Basar
(A.Y. 2020-2021)
E3_CSE_SEM2_REGULAR_Data Mining

B161479

Subject Code: DM

Date: 16/11/2021
Branch: CSE

Time: 120 mins
Max Marks: 60

SECTION A
ANSWER ALL OF THE FOLLOWING
(2*15=30 marks)

1) Which of the following are the technologies used in data mining
a) Statistics
b) Machine Learning
c) Information Retrieval
d) All of the above

2) Which of the following is a major issue in data mining
a) Bitcoin currency
b) Society
c) Foreign migration
d) None of the above

3) Which of the following is not used in association rule mining using apriori algorithm
a) outlier
b) support
c) confidence
d) frequent data

4) _____ is a data field that represents characteristic or feature of a data object.
a) pattern
b) attribute
c) support ratio
d) mode

5) Which of the following attribute types are of text values without an order
a) dataset
b) ordinal
c) nominal
d) numeric

6) Given two binary data objects
I = 1,0,0,1,1,1,0,1
J = 1,1,0,0,1,0,1,1
The dissimilarity between I and J is
a) 4/3
b) 3/4
c) 1/4
d) ½

Scanned by TapScanner

7) Which of the following is a possible solution to fill the missing values for data cleaning
a) Ignore the tuple
b) Fill outlier data
c) Both a) and b)
d) None of the above

8) The given data values – (4, 8, 15, 21, 21, 24, 25, 28, 34) are put into 3 bins as
BIN 1- 4, 4, 15
BIN 2- 21, 21, 24
BIN 3- 25, 25, 34

This type of binning is called _____
a) Partition into equal-frequency bins
b) Smoothing by bin means
c) Smoothing by bin boundaries
d) Mean-median smoothing

9) Out of 300 male students, 250 read fiction and 50 read non-fiction whereas out of 1200 female students, 200 read fiction and 1000 read non-fiction. The expected frequency (e) for male students to read fiction is
a) 300
b) 90
c) 450
d) 1500

10) _____ is a tree structure that is used to represent the process of hierarchical clustering
a) linked list
b) binary tree
c) acyclic graph
d) dendogram

11) DBSCAN is a
a) Hierarchical based clustering algorithm
b) Partition based clustering algorithm
c) Density based clustering algorithm
d) Grid based clustering algorithm

12) Which of the following is an attribute selection measure used in ID3 (Decision tree classification) algorithm
a) Information Gain
b) Mode value
c) Standard deviation
d) Inter quartile range

13) If the actual classification label is "false" but it is predicted as "true", then it is called
a) True Positive
b) True Negative
c) False Positive
d) False Negative

14) Which of the following classification techniques uses "Lazy Learner's Approach"
a) Decision tree
b) k-NN classification
c) Rule based classification
d) SVM

Scanned by TapScanner

15) Data mining is the process of
a) Extracting interesting patterns or knowledge from huge amount of data
b) Identifying high computing mechanisms through algorithmic way
c) Combining data from various sources to form a data resource
d) None of the above

Section B

Answer any Three (3) Questions

1Q)
a) Consider the following transaction table

Trans ID	Items bought
T1	I1, I2, I3, I4, I5, I6
T2	I7, I2, I3, I5, I6
T3	I1, I8, I4, I5
T4	I1, I9, I0, I4
T5	I0, I2, I4

Use apriori algorithm to do **Association Rule Mining**. Support count=3, confidence=80% (5 marks)

b) Consider the following 2-D points

X	Y
2	2.5
4	2
6	3.5
8	3.5
10	4

Consider the following regresson lines

$Y = (0.37)X + 0.85 \rightarrow$ (MODEL-1)

$Y = (0.5)X + 0.85 \rightarrow$ (MODEL-2)

Which line is the better one for regression? Prove it. (5 marks)

2Q) Consider the following data

Name	Over 170cm	Eye	Hair length	Sex
Drew	No	Blue	Short	Male
Claudia	Yes	Brown	Long	Female
Drew	No	Blue	Long	Female
Drew	No	Blue	Long	Female
Alberto	Yes	Brown	Short	Male
Karin	No	Blue	Long	Female
Nina	Yes	Brown	Short	Female
Sergio	Yes	Blue	Long	Male

Classify whether a person (named Drew, height 182cm, eye colour : brown, short haired) is male or female using naïve Bayes classifier. (5 marks)

Scanned by TapScanner

b) Calculate the classifier evaluation metrics for the given classifier's confusion matrix
Note: A classified as A is correct. Similarly for B,C and D. 'A' classified as any other character (B or C or D) is error. Similarly, B classsified as A or C or D is error.

		Recognized as					
		A	B	C	D		ERROR
True ID	A	9			1		1
	B		8	2			2
	C	2	1	6	1		4
	D	1			9		1
		3	1	2	2		8

Calculate the
i) accuracy for character 'A' (2.5 marks)
ii) error rate for character 'B' (2.5 marks)

3Q)
Consider the points A(2,3), B(0,2), C(4,5), D(3,6), E(1,8)
Cluster them using Bottom-Up hierarchical clustering technique, where number of clusters required, k=3.
Use euclidean distance between points and single linkage between clusters.
(calculate distance matrix for each iteration) [10 marks]

4Q)
Use k-means clustering algorithm, cluster the given points where k=2
A(1,1), B(2,1), C(4,3), D(5,4)
Consider initial cluster heads, C1 and C2 as A and B respectively. Use Euclidean distance between points. **[10 marks]**

5Q)
a) Consider the marks data of a student (out of 25 max marks)

Marks of Student
8
10
15
20
25

Normalize the above data [marks given between 0(min) and 25(max)] using min-max normalization by setting new_min = 0 and new_max = 1 (5 marks)

b) Calculate mean, median and mode of the following data
-15, -2, -2, -1, 0, 0, 0, 2, 3, 3, 5, 6, 6, 7, 8, 12, 45 (5 marks)

6Q)
a) Explain steps involved in 'Knowledge Discovery from Data' with neat diagram? (5 marks)
b) What are the major issues in data mining? (5 marks)

Scanned by TapScanner

B161479

RAJIV GANDHI UNIVERSITY OF KNOWLEDGE TECHNOLOGIES, BASAR

(A.Y. 2020-21,Sem2 Regular)

Computer Science & Engineering

Subject Name: Graph Theory & Combinatorics — Subject code: GT &C

Date: 18/11/2021 — Duration : 120 Mins

Exam: E3S2_EST_Regular — Max. Marks: 60

SECTION-A

Answer all — 30 * 1M= 30M

1. Let G be a simple graph with 'n' vertices, Then the number of edges of G is
   a) $= n(n-1)$ b) $\leq n(n-1)/2$
   c) $= n$ d) $\leq 2^n$
2. Consider the graph shown below

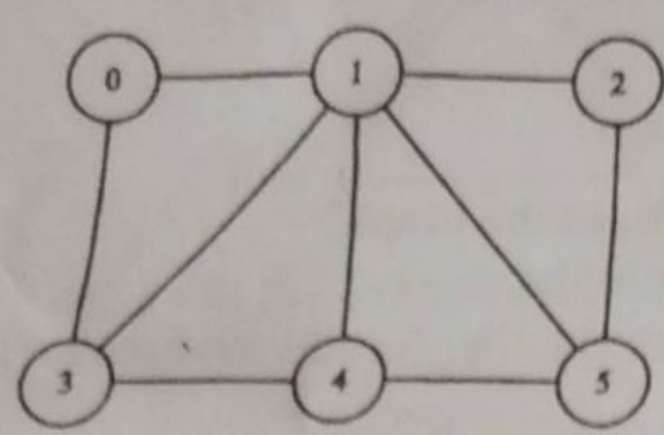

   Which of the following is TRUE about the given graph? (Note: Eulerian –Euler circuit exists, Hamiltonian – Hamiltonian circuit exists)
   a) It is Eulerian & Hamiltonian
   b) It is not Eulerian & Hamiltonian
   c) It is Eulerian but not Hamiltonian
   d) It is neither Eulerian nor Hamiltonian
3. For the graph shown below, the chromatic number is

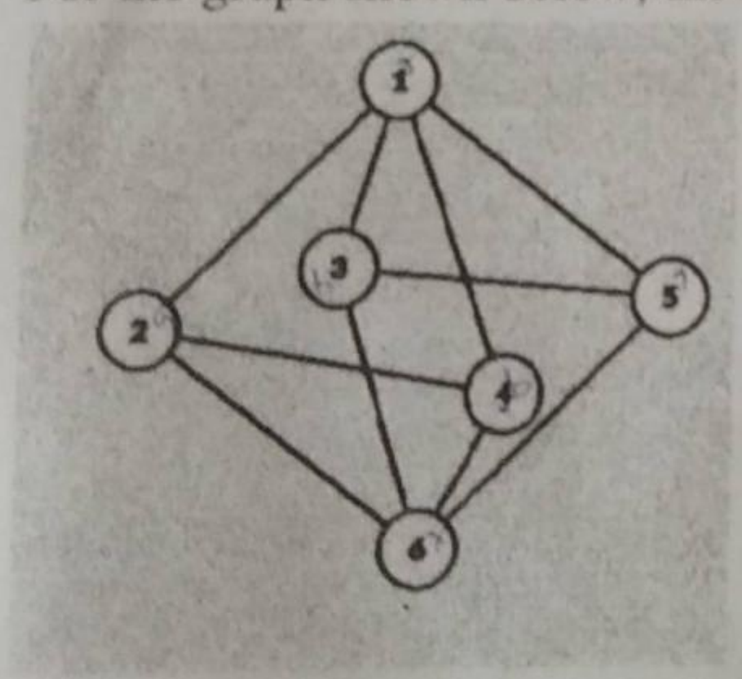

   a) 2 b) 3 c) 4 d) 5

Scanned by TapScanner

4. Consider the following two graphs

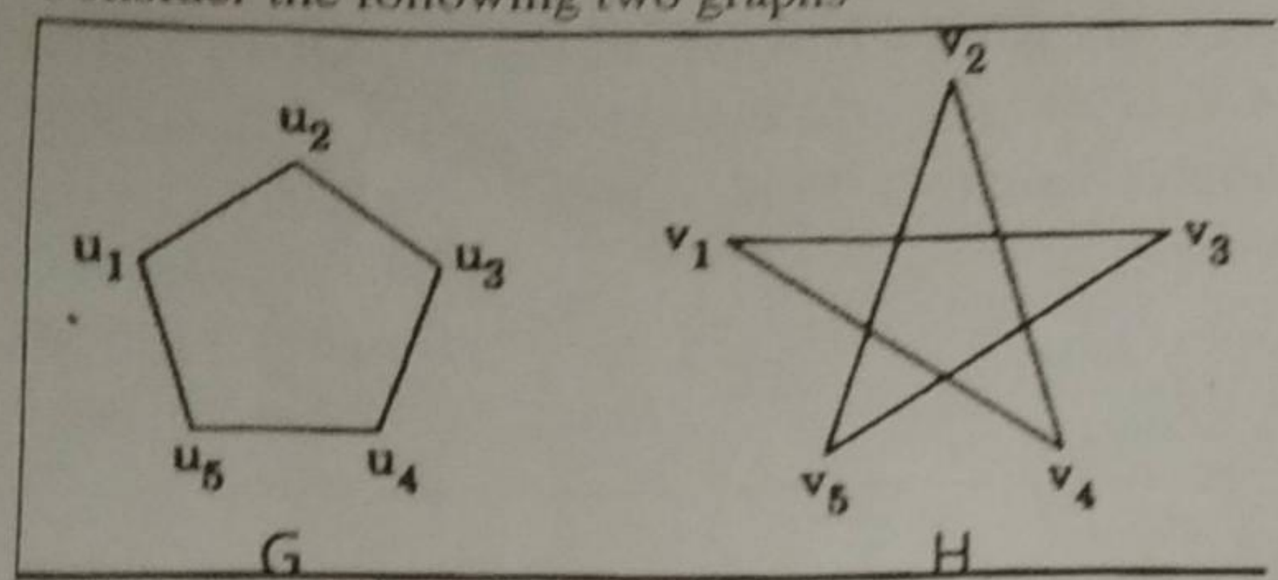

Which of the following is TRUE about the given graphs G , H?

a) G & H are complement to each other
b) G & H are isomorphic to each other
c) Both (a) & (b)
d) None of (a) & (b)

5. An Undirected graph has 8 edges & each vertex is of degree 2 then what is the number of vertices

a) 7 b) 8 c) 5 d) 10

6. Which of the following is TRUE about Graphs

a) Sum of degrees of all vertices = Number of edges in the graph
b) Number of edges in graph = Number of regions in the graph
c) Number of vertices of odd degree is always even number for any undirected graph
d) None of the above

7. An undirected graph contains an Eulerian circuit if and only if it is connected and its vertices are

a) All of even degree
b) All of odd degree
c) Of any degree
d) Even in number

8. The number of colors required to color a complete bi-partite graph ($K_{m,n}$) is

a) m b) n c) m+n d) 2

9. For the graph shown below, which of the following is NOT a cut set

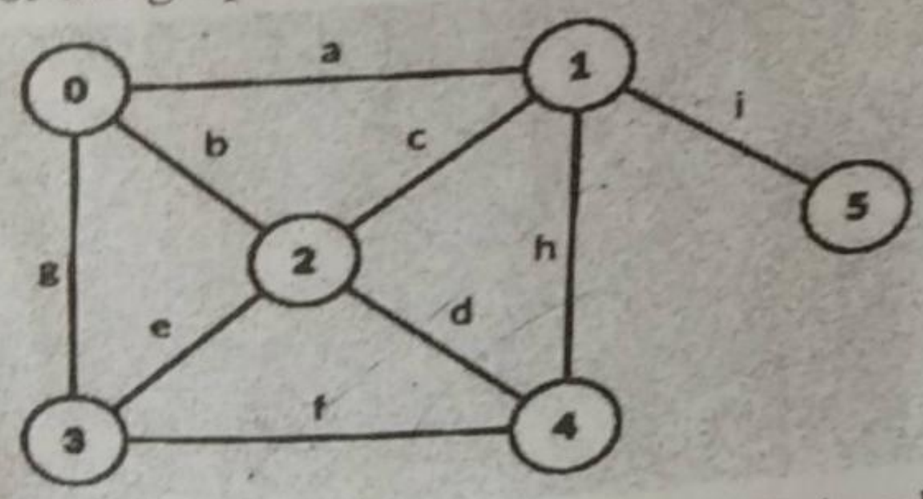

a) {a,b,g} b) {a,b,e,f} c) {a,c,h,d} d) {a,c,d,f}

Scanned by TapScanner

10. Which of the following must be satisfied for a graph to be Bi-partite

a) Graph should not contain cycles of odd length

b) Graph can contain any length cycles

c) Graph should be connected

d) Both (a) & (c)

11. If G is a planar graph (v- no of vertices, e-no. of edges, r-no. of Regions) then

a) v = 2*e b) e +f =v c) v+f= e+2 d) v-e =f

12. For the graph shown below, which of the following is FALSE

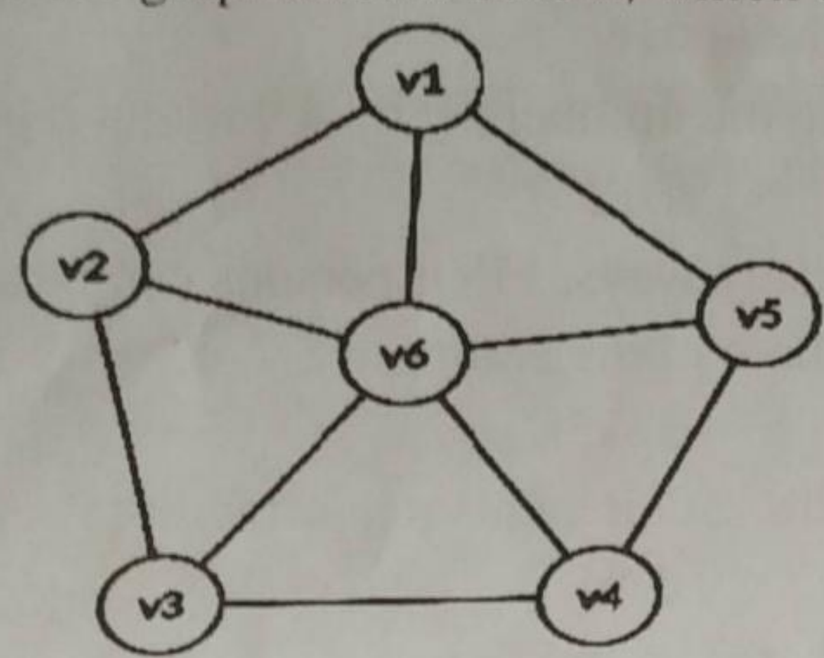

a) Covering number =4

b) Independence number =2

c) {v1, v3} is a maximum independent set

d) {v1,v2,v4} is a covering

13. In a complete graph on 3 vertices, the number of maximal matchings is

a) 0 b) 1 c) 2 d) 3

14. Which of the following degree sequences represent simple undirected graph

S1 : {6,6,6,6,4,3,3,0}

S2; {6,5,5,4,3,3,2,2,2}

a) S1 represents a Graph but S2 not

b) S2 represents a Graph but S1 not

c) Both represent Graph

d) Neither of them Represent graph

15. The relation {(1,2),(1,3),(3,1),(1,1),(3,3),(3,2),(1,4),(4,2),(3,4)} over A {1,2,3,4} is

a) Reflexive b)Transitive c) Symmetric d) Equivalence

16. A matching of a graph is said to be perfect if every vertex of G is matched. Then find whether the following graph has a perfect match or NOT

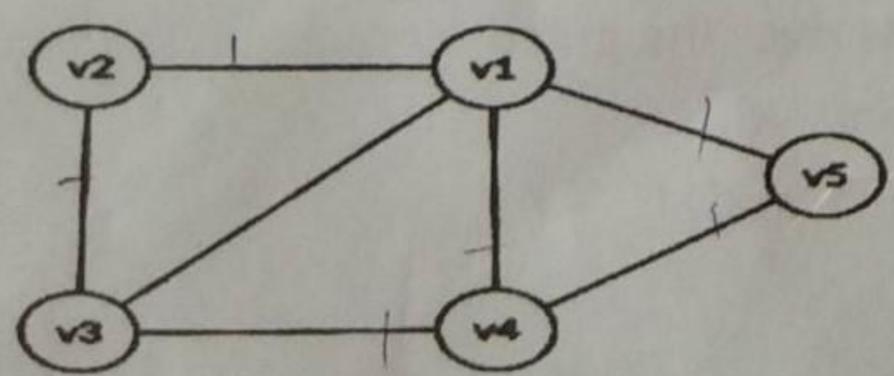

a) Yes b) NO

Scanned by TapScanner

17. Consider the graph given in Q.No. 16, which of the following is the minimal vertex cover

a) {v2,v4,v5} b) {v1,v2,v3,v4,v5} c) {v1,v3,v4} d){v1,v3,v4,v5}

18. In a Digraph representation of a relation, a loop is present on all the vertices of the graph, then the relation is said to be

a) Symmetric b)Reflexive c)Transitive

19. The maximum number of spanning trees, a graph of 'n' vertices can contain is

a) n * (n-1) b) n^{n-2} c) n d) nC_2

20. Which of the following is an Equivalence relation

a) R1 = { $a \geq b \mid a,b \in Z$} b) R2= { $a \equiv b \pmod 3 \mid a,b \in N$}

c) R3= {a+b=3 | $a,b \in Z$} d) all of the above

21. How many 3-digit numbers can be formed using the numbers 1,2,3,4 without repetition

a) 36 b) 24 c) 18 d)12

22. From a group of 7 men and 6 women, In how many ways, FIVE persons can be selected to form a committee so that at least 3 men are there in the committee

a) 564 b) 645 c) 735 d) 756

23. How many functions are possible from a set with '3' elements to a set with '5' elements

a) 15 b) 20 c)125 d)81

24. How many bit strings of length 7 start with either 0 or end with 1

a) 64 b) 32 c) 128 d) 96

25. How many cards must be selected from a standard deck of 52 cards to guarantee that at least FIVE cards of the same suit are chosen? { standard deck will have 4 different suits, each suit contain 13 cards}

a) 5 b)20 c)21 d)14

26. Transaction management is one important aspect of Databases. Consider two transactions T1, T2 having n1 and n2 number of operations respectively. A concurrent schedule is the one which interleaves T1 and T2s operations without disturbing the order of the operations in a particular transaction. Then the number of concurrent schedules possible are

a) n1! * n2!

b) (n1+ n2)!

c) (n1+ n2)! / n1! n2!

d) n1! - n2!

27. In a C program, A variable name can contain letters (lowercase, uppercase), digits and only _ (under score). In how many ways a variable name can be written if it should start with only letter

28. Consider a set {a,b,c,d,e,f}. How many subsets over the given set must be selected to guarantee that at least one subset contain element 'a'.

a) 64 b) 32 c) 33 d) 6

Scanned by TapScanner

29. Maximum number of elements a binary tree of height 5 (if height of a tree with single node is counted as 1) can have

a) 30 b) 31 c) 63 d)15

30. Chromatic number of a complete graph (K_n) is

a) n b) n-1 c)n+1 d)n/2

Section-B

Answer any THREE of the following. 3* 10M = 30M

1. (a) Define Isomorphism, 1-Isomorphism. Give appropriate examples (5M)
   (b) Find whether the below graphs are isomorphic or not. Explain the reasons (5M)

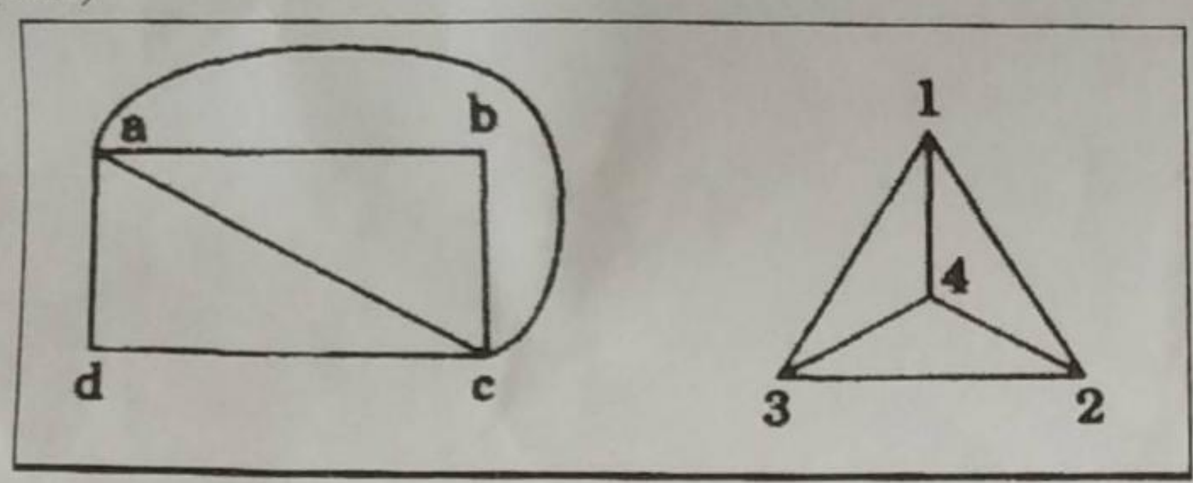

2. (a) Define planar graph. What is relation between edges and vertices of a planar graph. (5M)
   (b) Prove that complete graphs K_5, $K_{3,3}$ are Non-planar (5M)
3. (a) Define spanning tree. Explain either Prim's or Kruskal's Algorithm for finding minimum spanning tree. (5M)
   (b) Find Minimum spanning tree for the following weighted graph (5M)

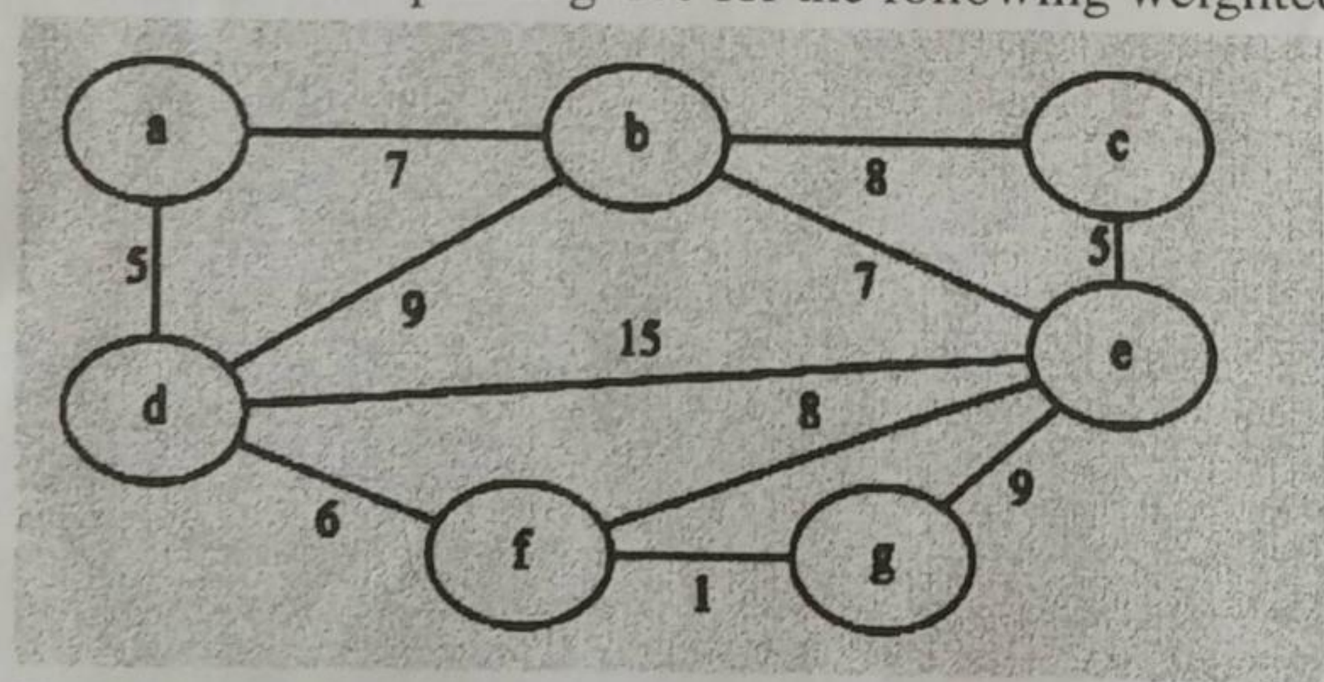

4. (a) Explain Matching and vertex covering with examples (6M)
   (b) What is Independent set. Find out Maximal independent set for the following graph (4M)

Scanned by TapScanner

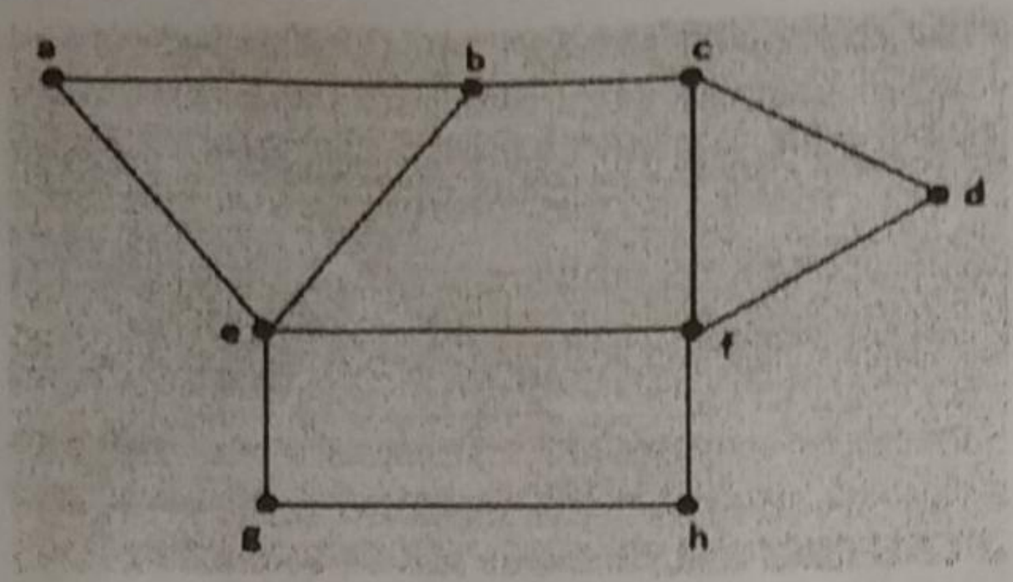

5. (a) What is a Hamiltonian graph. Check whether Hamiltonian path or hamiltonian circuit exists for the following graph. (5M)

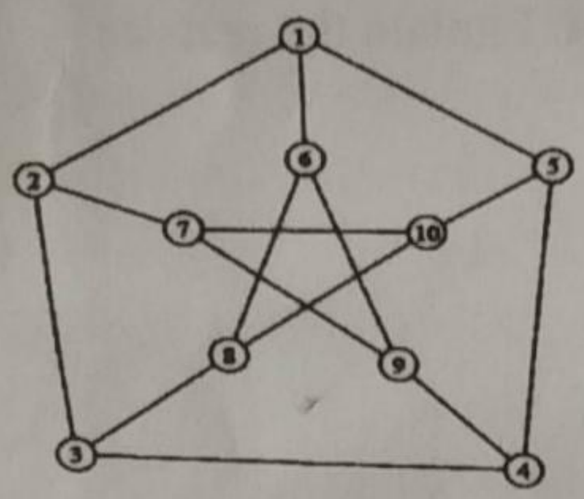

(b) Define a binary tree. Write In-order, pre-order, post-order traversals of the following tree (5M)

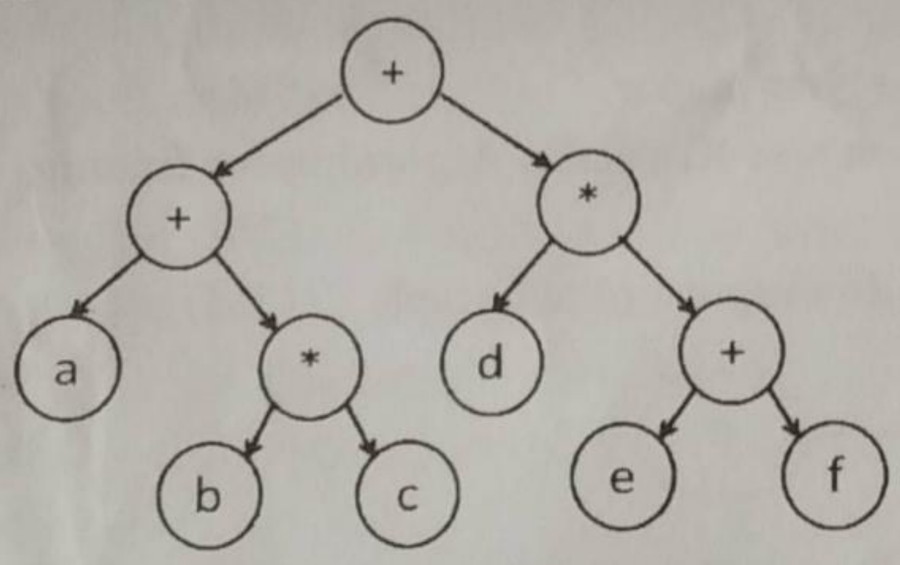

6. Define the following with examples 5*2M=10M
   i. Principle of inclusion & Exclusion,
   ii. Pigeon-hole principle
   iii. Sub graph
   iv. Cut set
   v. Fundamental Circuit

----------End of paper ----------

Scanned by TapScanner