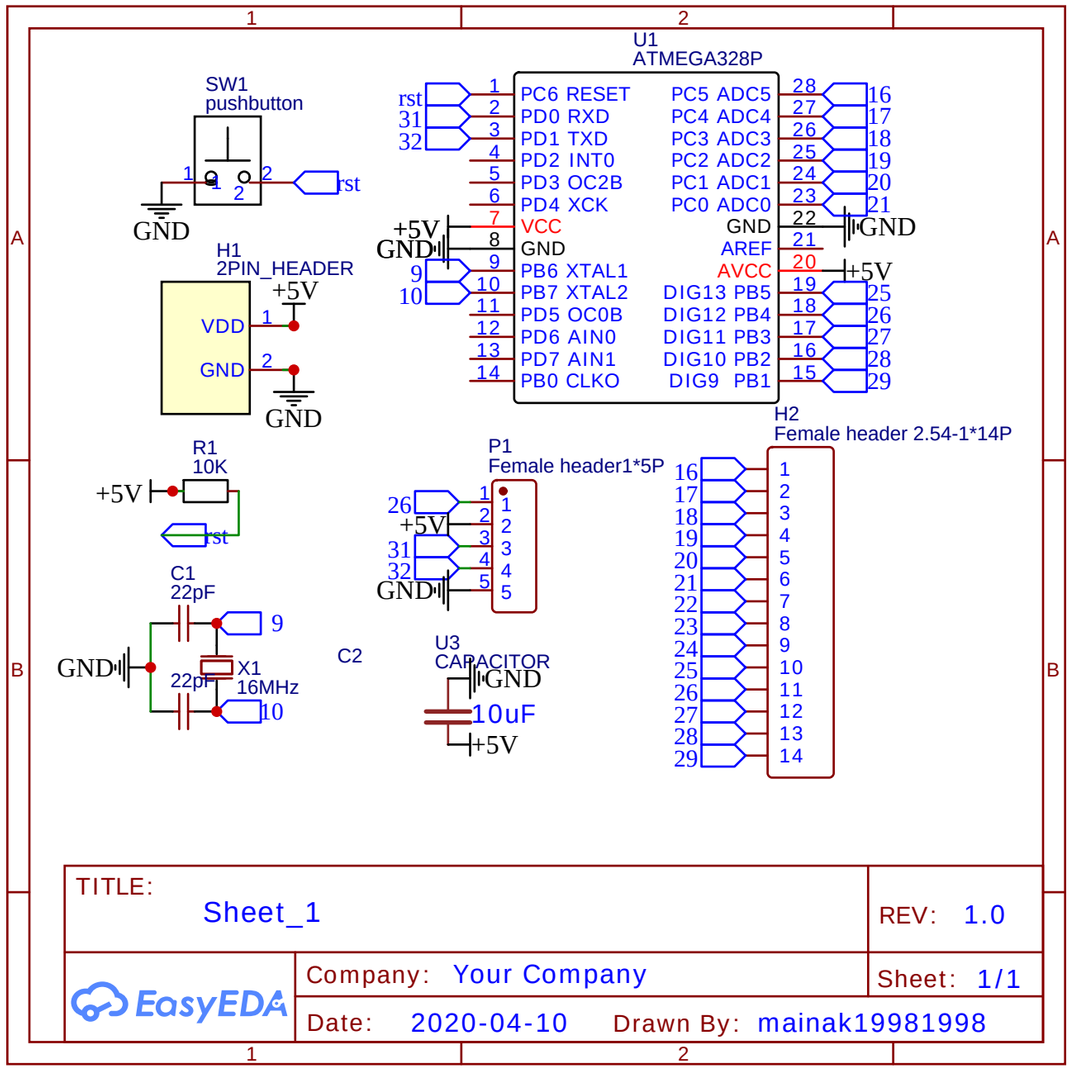

TITLE:
Sheet_1
REV: 1.0
Company: Your Company
Sheet: 1/1
Date: 2020-04-10
Drawn By: mainak19981998
EasyEDA