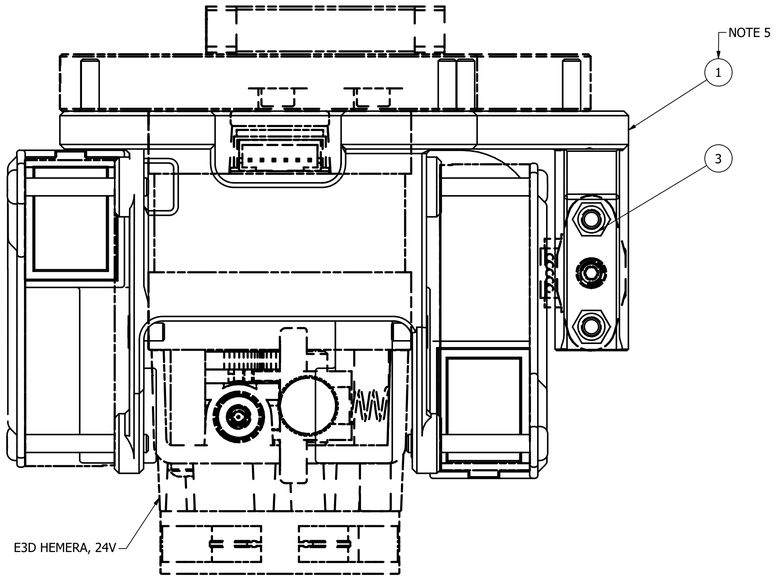

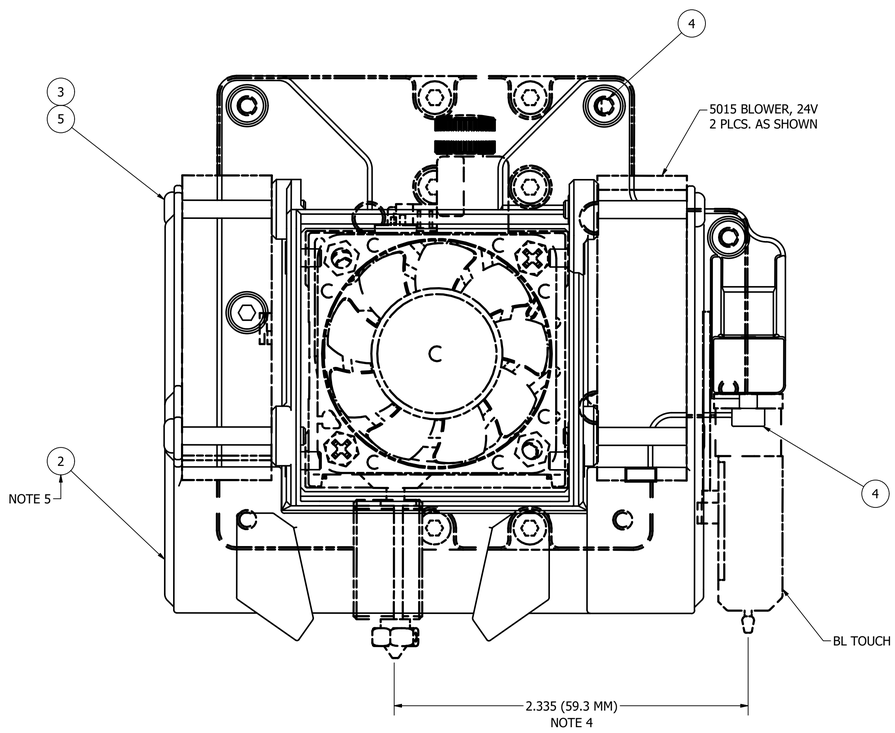

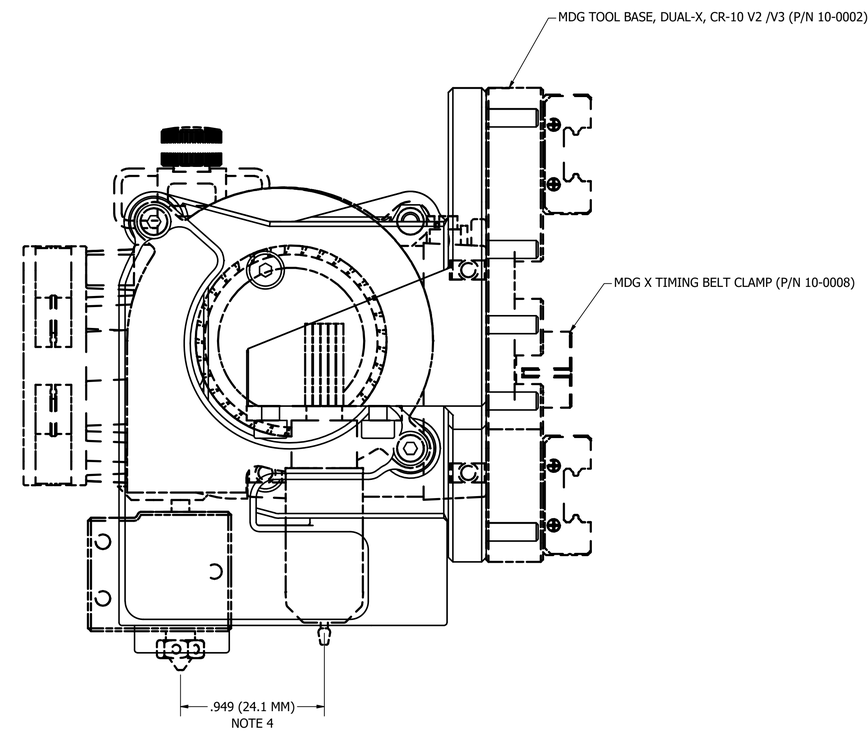

PARTS LIST

ITEM	QTY	PART NUMBER	DESCRIPTION
1	1	10-0018#1	MDG EXTRUDER MOUNT, CR-10 V2/V3 TO E3D HEMERA
2	1	10-0018A#0	FAN DUCT, E3D HEMERA, DUAL 5015
3	6	HN-M3X0.5	HEX LOCK
4	9	M119A2A163	SHCS
5	4	M120A2A165A	BHCS
6	4	M121A2A160	FHCS

NOTES:

1. DASHED LINES INDICATE REFERENCE COMPONENTS AND ASSEMBLIES WHICH ARE NOT INCLUDED IN BOM. THIS INCLUDES ITEMS REUSED FROM THE OEM PRINTER ASSEMBLY AND / OR TO BE PURCHASED SEPERATLY.
2. FOR STEP-BY-STEP INSTALLATION INSTRUCTIONS PLEASE REFERENCE DOC NO. MDG CR-10 - DOC, LATEST REVISION.
3. PLEASE VISIT MDG CR-10 PROJECT BUILD PAGE FOR ADDITIONAL PROJECT / BUILD INFORMATION
4. BLTOUCH PROBE TO NOZZLE SPACING FOR FIRMWARE CONFIGURATION
5. STANDARD MATERIAL PETG. FOR HEATED CHAMBER PRINTING USED ABS, ASA OR NYLON

NO.	DESCRIPTION	BY	CHK	APP	DATE

REVISIONS

THIS DRAWING IS THE PROPERTY OF MAKERS DEVELOPMENT GROUP, LLC.
THIS DRAWING AND DATA EMBODY PROPRIETARY INFORMATION WHICH IS THE CONFIDENTIAL PROPERTY OF MAKERS DEVELOPMENT GROUP, LLC AND SHALL NOT BE COPIED, REPRODUCED, DISCLOSED TO OTHERS, OR OTHERWISE USED IN WHOLE OR IN PART IN ANY MATTER PREJUDICIAL TO THE INTERESTS OF MAKERS DEVELOPMENT GROUP, LLC WITHOUT EXPRESS WRITTEN CONSENT OF MAKERS DEVELOPMENT GROUP, LLC. MAKERS DEVELOPMENT GROUP, LLC EXPRESSLY RESERVES ALL DESIGN, MANUFACTURING USE, REPRODUCTION AND SALES RIGHTS IN AND TO ALL INFORMATION CONTAINED IN OR DISCLOSED BY THIS DOCUMENT. THIS DRAWING IS LOANED IN CONFIDENCE WITH THE UNDERSTANDING IT SHALL BE RETURNED ON DEMAND. ACCEPTANCE OF THIS DRAWING SHALL BE CONSTRUED AN AGREEMENT TO OBSERVE THE FOREGOING CONDITIONS AND AS AN ADMISSION THAT MAKERS DEVELOPMENT GROUP, LLC IS THE EXCLUSIVE OWNER OF THIS DRAWING. "MAKERS DEVELOPMENT GROUP EXPRESSLY RESERVES ALL DESIGN, MANUFACTURING USE, REPRODUCTION, SALES RIGHTS IN AND TO ALL INFORMATION CONTAINED IN OR DISCLOSED BY THIS DOCUMENT."

THIS DRAWING CONFORMS TO A.S.M.E. STANDARD Y14.5 - 2018. UNLESS OTHERWISE SPECIFIED: ALL CIRCLES, LINES & FACES TO BE CONCENTRIC, PARALLEL & PERPENDICULAR WITHIN 0.010". UNSPECIFIED CHAMFERS AND RADII TO BE 0.03". UNSPECIFIED MACHINE FINISH 125 RMS. REMOVE ALL SHARP EDGES. COUNTERSINK TAPPED HOLES TO MAJOR THREAD DIAMETER. DO NOT SCALE DRAWING.

PROJECTION

UNSPECIFIED TOLERANCES

DIMENSION	.X	.XX	.XXX
UNDER 36"	+/- .050	+/- .010	+/- .005
OVER 36"	+/- .100	+/- .025	+/- .010
ANGLES		+/- 0° 30'	

MATERIAL:	SURFACE PREP.:
HARDNESS:	COAT / TREATMENT:
REFERENCE:	COLOR:
PATTERN:	
PREPARED BY / DATE:	CHECKED BY / DATE: PEW 2/21/2021
REVIEWED BY / DATE:	APPROVED BY / DATE: PEW 2/21/2021
PART NUMBER: 10-0046#0	

MAKERS DEVELOPMENT GROUP™

TITLE: MDG EXTRUDER MOUNT KIT, CR-10 V3 TO E3D HEMERA VOLCANO

DRAWING NUMBER:	SIZE	SCALE	REV
10-0046#0	D		0