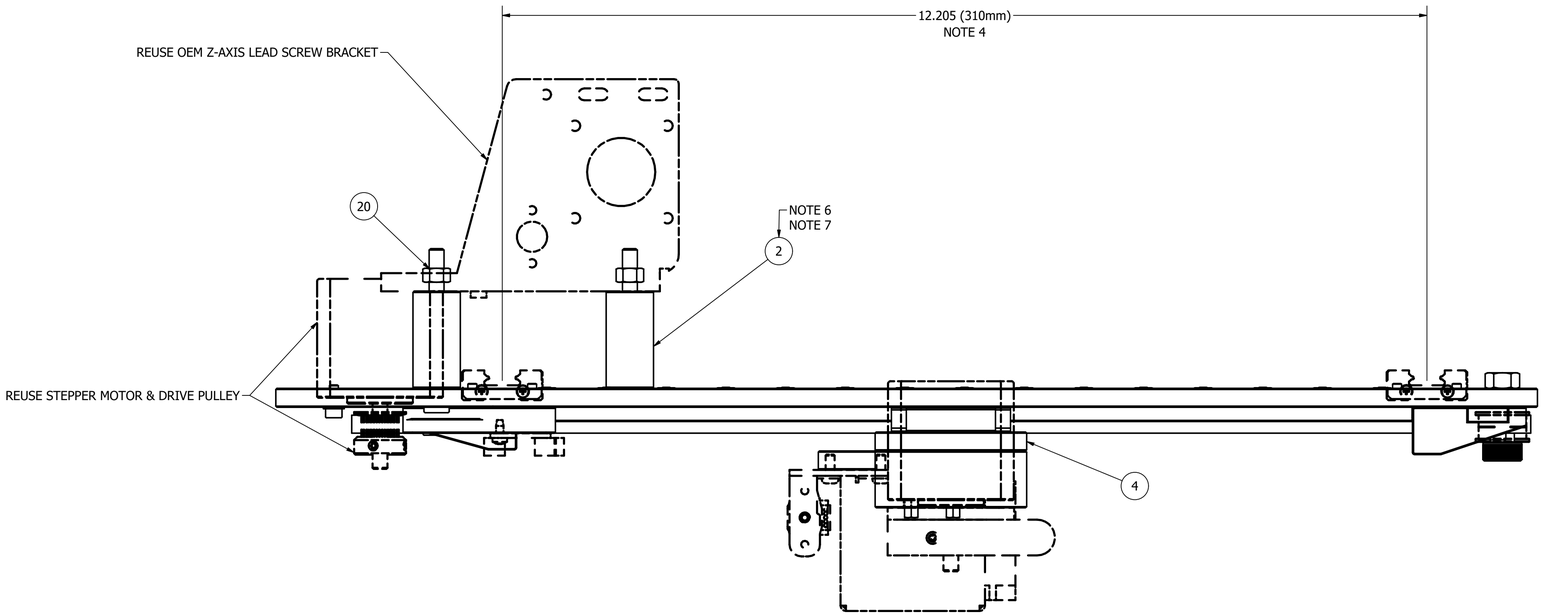

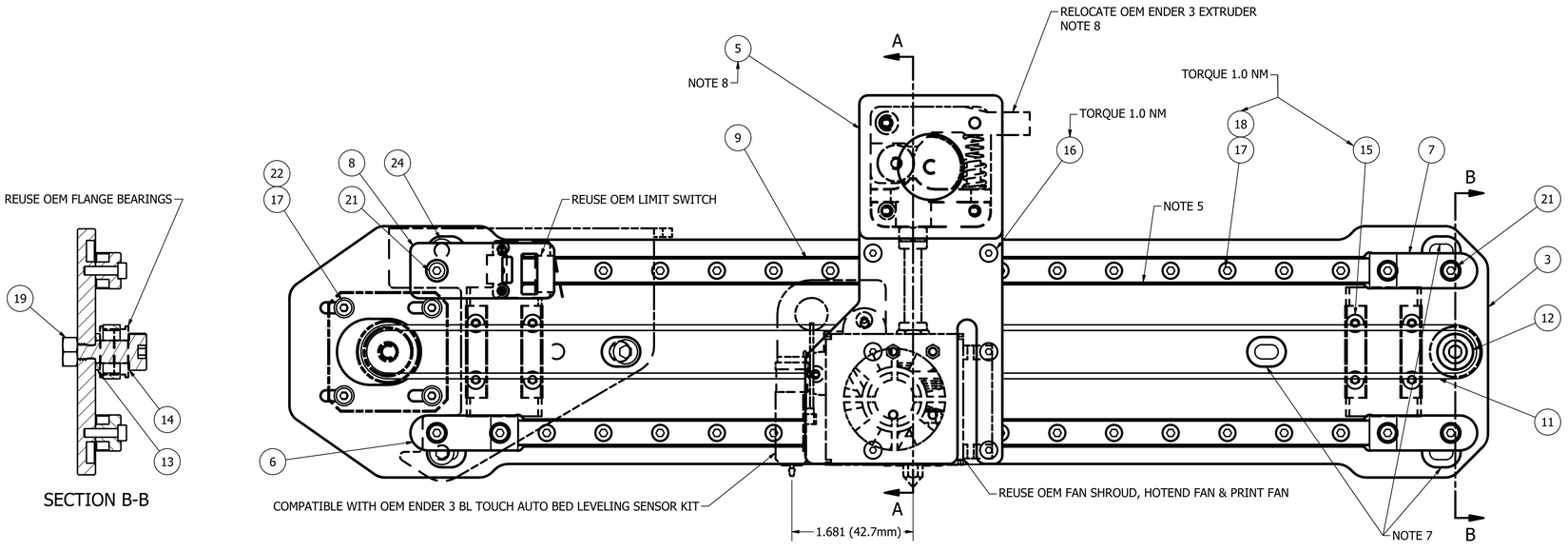

SECTION B-B

PARTS LIST			
ITEM	QTY	PART NUMBER	DESCRIPTION
1	1	10-0008	MDG X-AXIS TIMING BELT CLAMP
2	3	10-0009	MDG Z AXIS SPACER
3	1	10-0022	MDG DUAL-X LINEAR RAIL PLATE, 300 MM, ENDER 3
4	1	10-0023	MDG-TOOL BASE, DUAL-X, ENDER 3
5	1	10-0024	DIRECT DRIVE EXTRUDER MOUNT, ENDER 3 / CR-10 / MICRO-SWISS
6	1	10-0040	MDG X END STOP, LEFT, ENDER 3 PRO / V2
7	2	10-0041	MDG X END STOP, RIGHT, ENDER 3 PRO / V2
8	1	10-0042	MDG X LIMIT SWITCH PLATE, ENDER 3 PRO / V2
9	2	MDG-LR09-1H-300	LINEAR RAIL, 9MM X 300MM, SS
10	2	MDG-LRC-09H	LINEAR RAIL CARRIAGE, 9MM RAIL, H STYLE
11	1	MDG-GT2B-2P-6W-1M	GT2 BELT
12	1	SB-A201	SHOULDER BOLT, M8
13	1	SBS-A282	SHOULDER BOLT SHIM
14	1	SBS-A263	SHOULDER BOLT SHIM
15	16	M121A2A161	FHCS
16	6	M121A2A163	FHCS
17	34	M119A2A161	SHCS
18	30	HLN-M3X0.5	HEX LOCK NUT
19	1	HLN-M6X1	HEX LOCK NUT
20	3	HLN-M5X0.8	HEX LOCK NUT
21	7	M119A2A163	SHCS
22	4	M12A5C3	PLAIN WASHER
23	2	M119A2A153	SHCS
24	3	M119A2A188	SHCS
25	2	98952A114	HEX STANDOFF

NOTES:

1. DASHED LINES INDICATE REFERENCE COMPONENTS AND ASSEMBLIES WHICH ARE NOT INCLUDED IN BOM. THIS INCLUDES ITEMS REUSED FROM THE OEM PRINTER ASSEMBLY AND / OR TO BE PURCHASED SEPERATLY.
2. FOR STEP-BY-STEP INSTALLATION INSTRUCTIONS PLEASE REFERENCE DOC NO. MDG ENDER 3 - DOC, LATEST REVISION.
3. PLEASE VISIT MDG ENDER 3 PRO / V2 PROJECT BUILD PAGE FOR ADDITIONAL PROJECT / BUILD INFORMATION
4. 310MM SPACING FOR Z-AXIS RAILS FOR MOUNTING TO ANY 3D PRINTER USING 2040 ALUMINUM EXTRUSION WITH OUTSIDE EDGE TO OUTSIDE EDGE SPACING OF 330MM.
5. LINEAR RAILS MOUNTED IN PRECISION MACHINED POCKETS. LOWER EDGE IS REFERENCE EDGE. CONFIRM LINEAR RAILS ARE PARALLEL USING A DIAL INDICATOR.
6. MDG Z-SPACERS (P/N: 10-0009) FOR USE WHEN Z-AXIS LINEAR RAILS ARE USED. OEM ROLLER WHEELS CAN BE USED WHEN Z-AXIS LINEAR RAILS ARE NOT INSTALLED.
7. COMPATIBLE WITH AFTERMARKET DUAL-Z STEPPER MOTOR KITS. PURCHASE (3) ADDITIONAL MDG Z-SPACERS (P/N: 10-0009) WHEN UPGRADING TO DUAL Z STEPPER MOTOR DRIVES.
8. COMPATIBLE EDTRUDERS: OEM CREALITY, E3D TITAN MIRRORED, BONDTECH BMG MIRRORED
   COMPATIBLE HOTENDS: OEM CREALITY, MICRO-SWISS ALL METAL

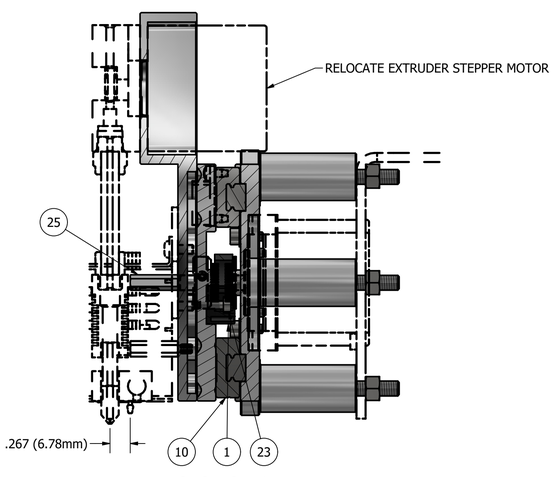

SECTION A-A

NO.	DESCRIPTION	BY	CHK	APP	DATE
	REVISIONS				

THIS DRAWING IS THE PROPERTY OF MAKERS DEVELOPMENT GROUP, LLC.
THIS DRAWING AND DATA EMBODY PROPRIETARY INFORMATION WHICH IS THE CONFIDENTIAL PROPERTY OF MAKERS DEVELOPMENT GROUP, LLC AND SHALL NOT BE COPIED, REPRODUCED, DISCLOSED TO OTHERS, OR OTHERWISE USED IN WHOLE OR IN PART IN ANY MATTER PREJUDICIAL TO THE INTERESTS OF MAKERS DEVELOPMENT GROUP, LLC WITHOUT EXPRESS WRITTEN CONSENT OF MAKERS DEVELOPMENT GROUP, LLC. MAKERS DEVELOPMENT GROUP, LLC EXPRESSLY RESERVES ALL DESIGN, MANUFACTURING USE, REPRODUCTION AND SALES RIGHTS IN AND TO ALL INFORMATION CONTAINED IN OR DISCLOSED BY THIS DOCUMENT. THIS DRAWING IS LOANED IN CONFIDENCE WITH THE UNDERSTANDING IT SHALL BE RETURNED ON DEMAND. ACCEPTANCE OF THIS DRAWING SHALL BE CONSTRUED AN AGREEMENT TO OBSERVE THE FOREGOING CONDITIONS AND AS AN ADMISSION THAT MAKERS DEVELOPMENT GROUP, LLC IS THE EXCLUSIVE OWNER OF THIS DRAWING. "MAKERS DEVELOPMENT GROUP EXPRESSLY RESERVES ALL DESIGN, MANUFACTURING USE, REPRODUCTION, SALES RIGHTS IN AND TO ALL INFORMATION CONTAINED IN OR DISCLOSED BY THIS DOCUMENT."

THIS DRAWING CONFORMS TO A.S.M.E. STANDARD Y14.5 - 2018. UNLESS OTHERWISE SPECIFIED: ALL CIRCLES, LINES & FACES TO BE CONCENTRIC, PARALLEL & PERPENDICULAR WITHIN 0.010". UNSPECIFIED CHAMFERS AND RADII TO BE 0.03". UNSPECIFIED MACHINE FINISH 125 RMS. REMOVE ALL SHARP EDGES. COUNTERSINK TAPPED HOLES TO MAJOR THREAD DIAMETER. DO NOT SCALE DRAWING.

PROJECTION

UNSPECIFIED TOLERANCES			
DIMENSION	X	XX	XXX
UNDER 36"	+/- .050	+/- .010	+/- .005
OVER 36"	+/- .100	+/- .025	+/- .010
ANGLES	+/- 0° 30'		

MATERIAL:		SURFACE PREP.:	
HARDNESS:		COAT / TREATMENT:	
REFERENCE:		COLOR:	
PATTERN:			
PREPARED BY / DATE:		CHECKED BY / DATE:	MDG 12/6/2020
REVIEWED BY / DATE:		APPROVED BY / DATE:	MDG 12/6/2020
PART NUMBER:	10-0036		

MAKERS DEVELOPMENT GROUP™

TITLE: MDG X-AXIS DUAL LINEAR RAIL KIT, ENDER 3 PRO / V2

DRAWING NUMBER:	SIZE	SCALE	REV
10-0036	D		0