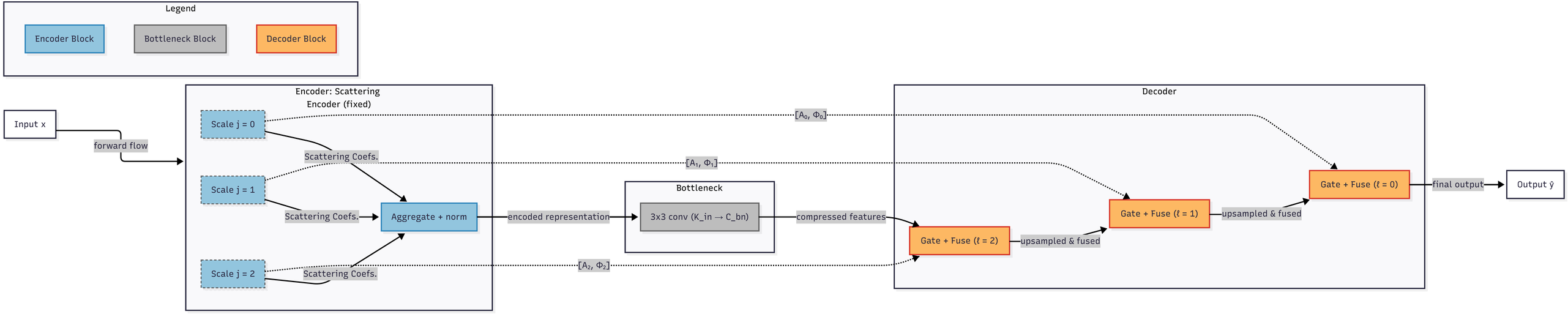
Legend
Encoder Block
Bottleneck Block
Decoder Block
Input x
forward flow
Encoder: Scattering Encoder (fixed)
Scale j = 0
Scale j = 1
Scale j = 2
Scattering Coefs.
Scattering Coefs.
Scattering Coefs.
Aggregate + norm
encoded representation
Bottleneck
3x3 conv (K_in → C_bn)
compressed features
[A₀, Φ₀]
[A₁, Φ₁]
[A₂, Φ₂]
Decoder
Gate + Fuse (ℓ = 2)
upsampled & fused
Gate + Fuse (ℓ = 1)
upsampled & fused
Gate + Fuse (ℓ = 0)
final output
Output ŷ