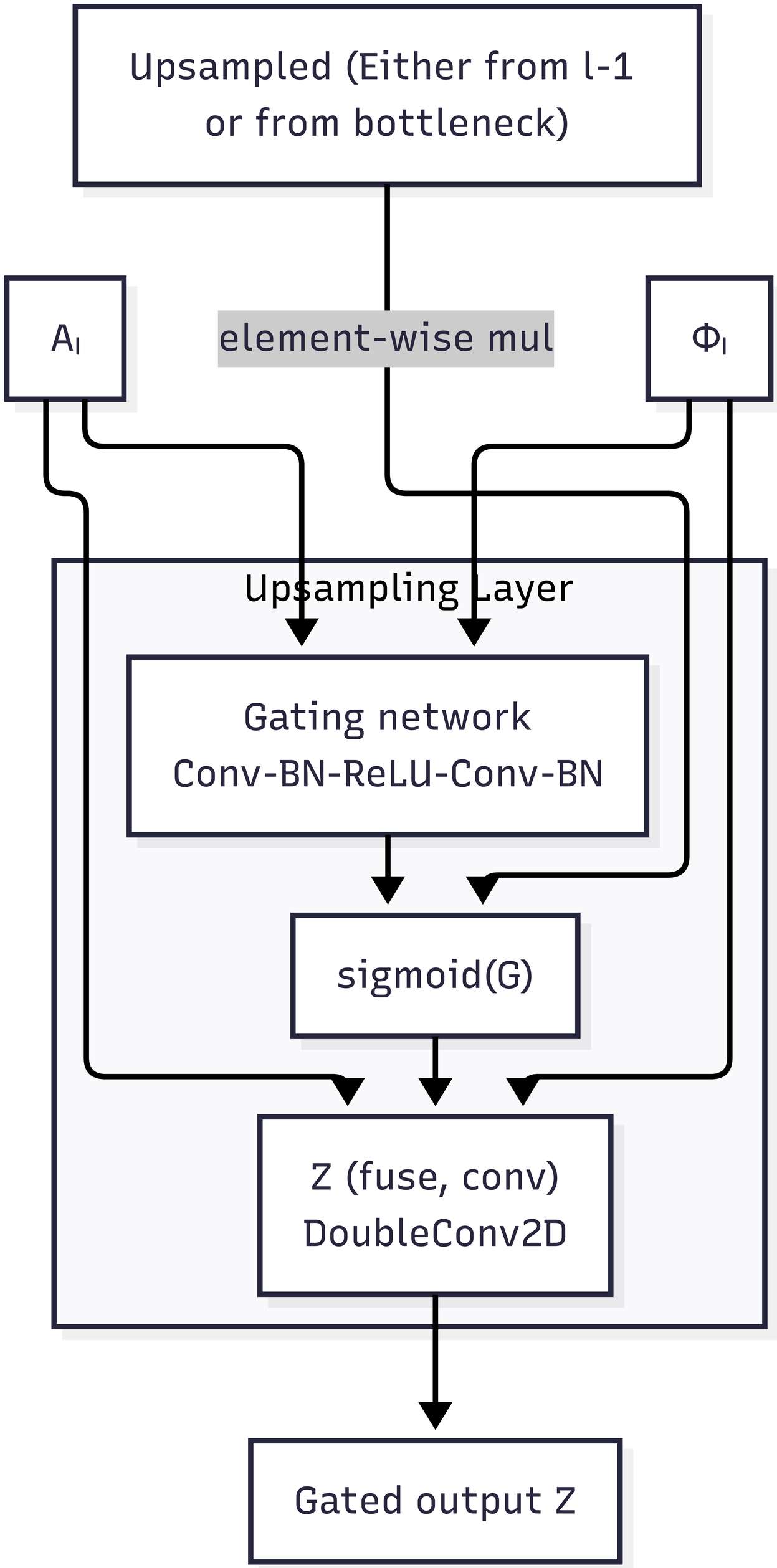
Upsampled (Either from l-1
or from bottleneck)
A_l
element-wise mul
Φ_l
Upsampling Layer
Gating network
Conv-BN-ReLU-Conv-BN
sigmoid(G)
Z (fuse, conv)
DoubleConv2D
Gated output Z