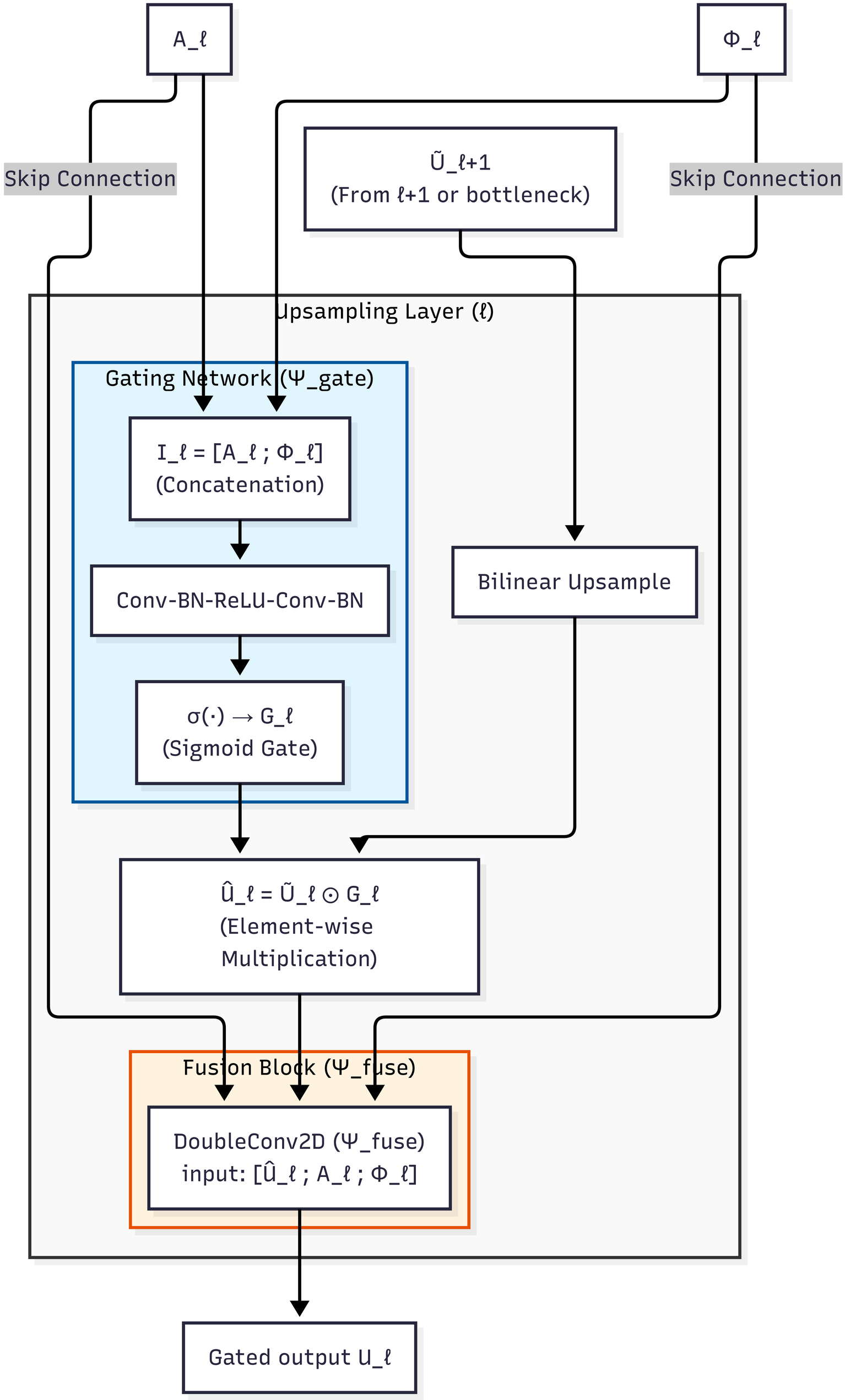
A_ℓ
Φ_ℓ
Skip Connection
Ũ_ℓ+1
(From ℓ+1 or bottleneck)
Skip Connection
Upsampling Layer (ℓ)
Gating Network (Ψ_gate)
I_ℓ = [A_ℓ ; Φ_ℓ]
(Concatenation)
Conv-BN-ReLU-Conv-BN
σ(·) → G_ℓ
(Sigmoid Gate)
Bilinear Upsample
Û_ℓ = Ũ_ℓ ⊙ G_ℓ
(Element-wise
Multiplication)
Fusion Block (Ψ_fuse)
DoubleConv2D (Ψ_fuse)
input: [Û_ℓ ; A_ℓ ; Φ_ℓ]
Gated output U_ℓ