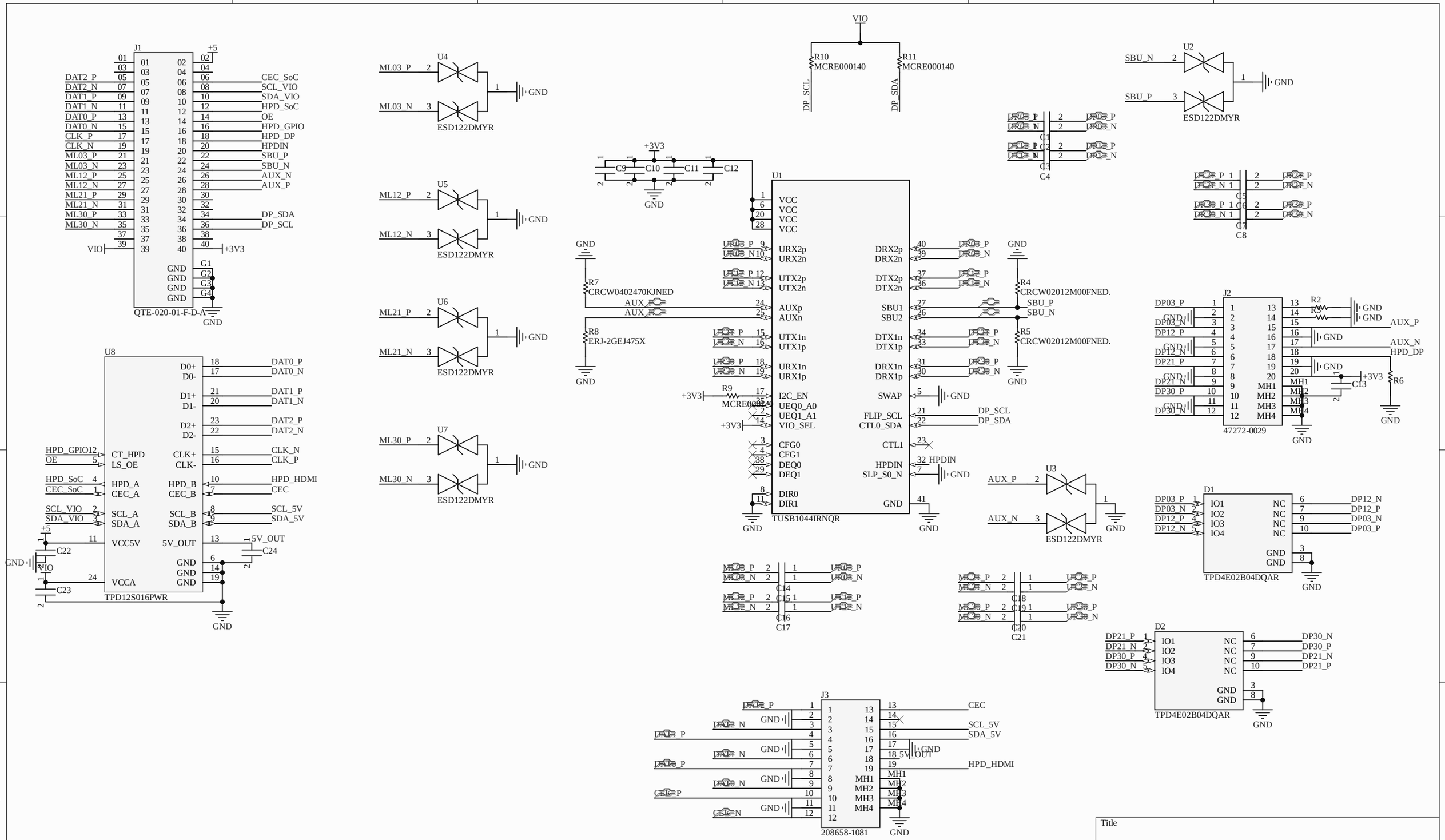
J1
QTE-020-01-F-D-A
U8
TPD12S016PWR
U4
U5
U6
U7
ESD122DMYR
U1
TUSB1044IRNQR
J2
47272-0029
U2
U3
D1
D2
TPD4E02B04DQAR
J3
208658-1081
R10
R11
MCRE000140
R7
CRCW0402470KJNED
R8
ERJ-2GEJ475X
R9
R4
R5
CRCW02012M00FNED.
R2
R3
R6
C13
C1
C2
C3
C4
C5
C6
C7
C8
C9
C10
C11
C12
C14
C15
C16
C17
C18
C19
C20
C21
C22
C23
C24
VIO
+3V3
+5
GND
DP_SCL
DP_SDA
CEC_SoC
SCL_VIO
SDA_VIO
HPD_SoC
OE
HPD_GPIO
HPD_DP
HPDIN
SBU_P
SBU_N
AUX_N
AUX_P
DP_SDA
DP_SCL
DAT0_P
DAT0_N
DAT1_P
DAT1_N
DAT2_P
DAT2_N
CLK_N
CLK_P
HPD_HDMI
CEC
SCL_5V
SDA_5V
5V_OUT
HPD_GPIO12
HPD_SoC
CEC_SoC
DP03_P
DP03_N
DP12_P
DP12_N
DP21_P
DP21_N
DP30_P
DP30_N
ML03_P
ML03_N
ML12_P
ML12_N
ML21_P
ML21_N
ML30_P
ML30_N
Title
Size
B
Number
Revision
Date: 9/01/2025
Sheet of
File: C:\Users\..\Sheet1.SchDoc
Drawn By: