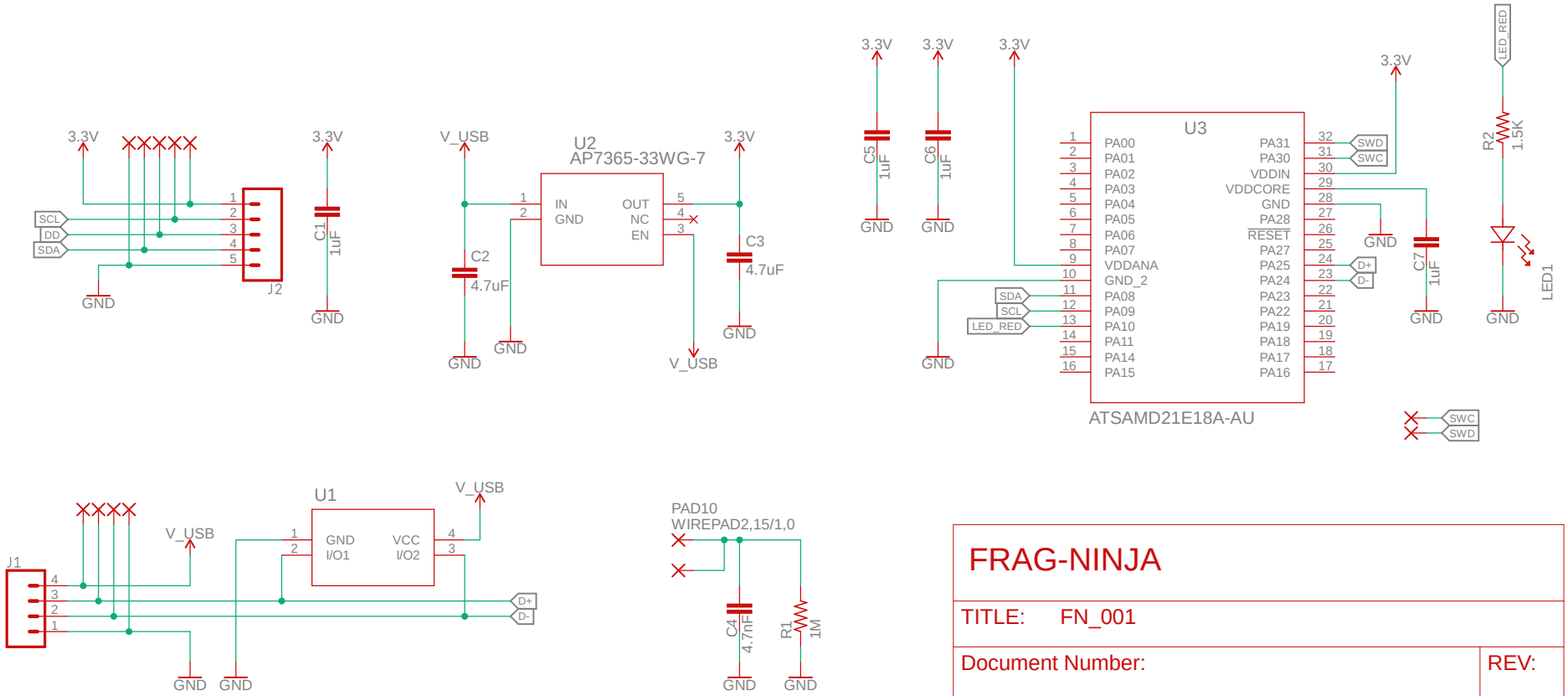

FRAG-NINJA

TITLE: FN_001

Document Number:

REV:

Date: 9/13/2020 12:38 AM

Sheet: 1/1