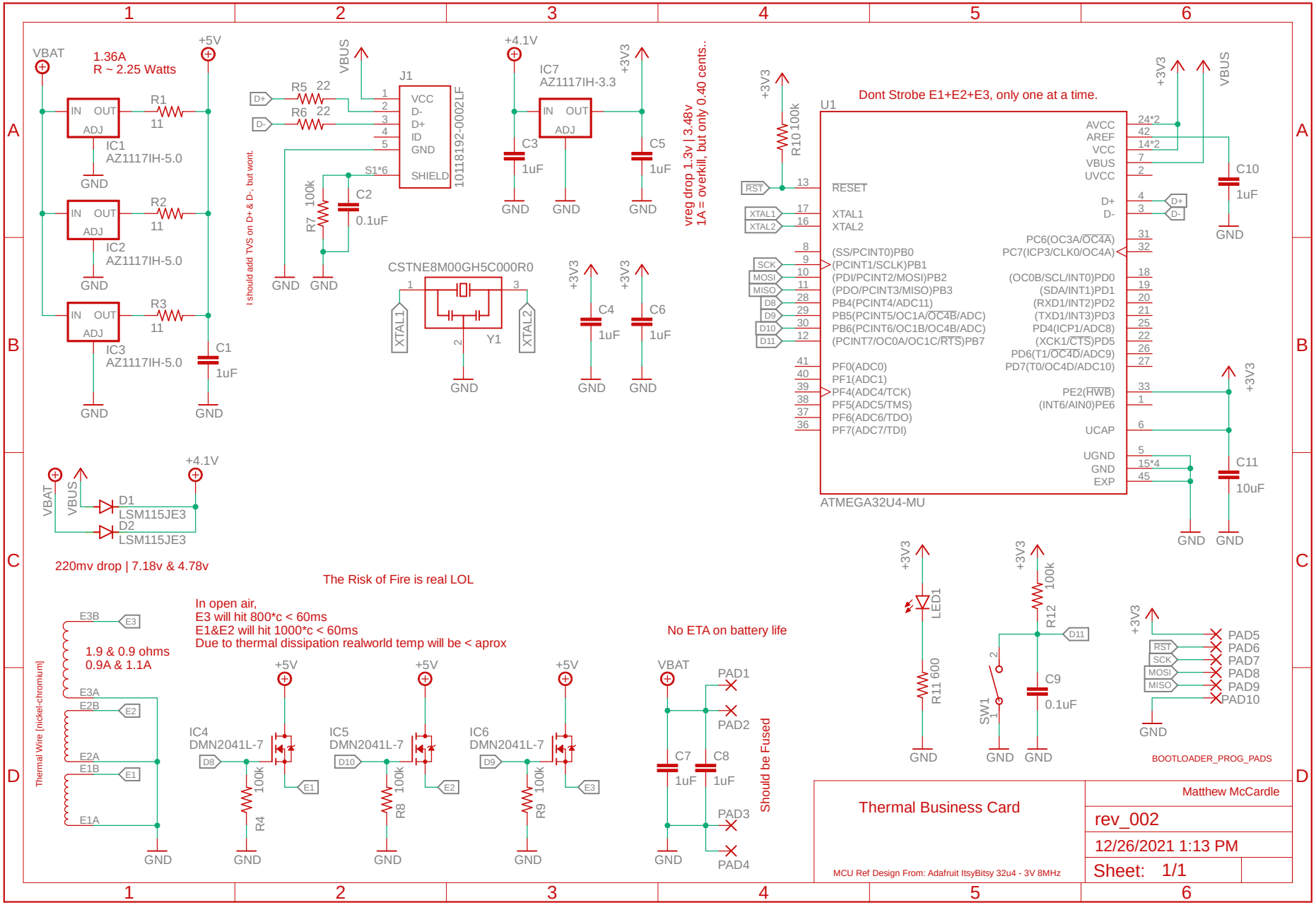
VBAT
1.36A
R ~ 2.25 Watts
+5V
IN OUT
ADJ
IC1
AZ1117IH-5.0
R1
11
IC2
AZ1117IH-5.0
R2
11
IC3
AZ1117IH-5.0
R3
11
C1
1uF
GND
VBUS
D+
D-
R5 22
R6 22
J1
VCC
D-
D+
ID
GND
SHIELD
1011818192-0002LF
S1*6
R7 100k
C2
0.1uF
I should add TVS on D+ & D-, but wont.
+4.1V
IC7
AZ1117IH-3.3
C3
1uF
C5
1uF
+3V3
vreg drop 1.3v | 3.48v
1A = overkill, but only 0.40 cents..
CSTNE8M00GH5C000R0
XTAL1
XTAL2
Y1
C4
1uF
C6
1uF
D1
LSM115JE3
D2
LSM115JE3
220mv drop | 7.18v & 4.78v
The Risk of Fire is real LOL
In open air,
E3 will hit 800*c < 60ms
E1&E2 will hit 1000*c < 60ms
Due to thermal dissipation realworld temp will be < aprox
1.9 & 0.9 ohms
0.9A & 1.1A
Thermal Wire [nickel-chromium]
E3B
E3A
E2B
E2A
E1B
E1A
IC4
DMN2041L-7
IC5
DMN2041L-7
IC6
DMN2041L-7
R4 100k
R8 100k
R9 100k
No ETA on battery life
PAD1
PAD2
PAD3
PAD4
C7
1uF
C8
1uF
Should be Fused
Dont Strobe E1+E2+E3, only one at a time.
U1
R10 100k
RESET
XTAL1
XTAL2
(SS/PCINT0)PB0
(PCINT1/SCLK)PB1
(PDI/PCINT2/MOSI)PB2
(PDO/PCINT3/MISO)PB3
PB4(PCINT4/ADC11)
PB5(PCINT5/OC1A/OC4B/ADC)
PB6(PCINT6/OC1B/OC4B/ADC)
(PCINT7/OC0A/OC1C/RTS)PB7
PF0(ADC0)
PF1(ADC1)
PF4(ADC4/TCK)
PF5(ADC5/TMS)
PF6(ADC6/TDO)
PF7(ADC7/TDI)
AVCC
AREF
VCC
VBUS
UVCC
D+
D-
PC6(OC3A/OC4A)
PC7(ICP3/CLK0/OC4A)
(OC0B/SCL/INT0)PD0
(SDA/INT1)PD1
(RXD1/INT2)PD2
(TXD1/INT3)PD3
PD4(ICP1/ADC8)
(XCK1/CTS)PD5
PD6(T1/OC4D/ADC9)
PD7(T0/OC4D/ADC10)
PE2(HWB)
(INT6/AIN0)PE6
UCAP
UGND
GND
EXP
ATMEGA32U4-MU
C10
1uF
C11
10uF
LED1
R11 600
R12 100k
C9
0.1uF
SW1
PAD5
PAD6
PAD7
PAD8
PAD9
PAD10
BOOTLOADER_PROG_PADS
Thermal Business Card
MCU Ref Design From: Adafruit ItsyBitsy 32u4 - 3V 8MHz
Matthew McCardle
rev_002
12/26/2021 1:13 PM
Sheet: 1/1