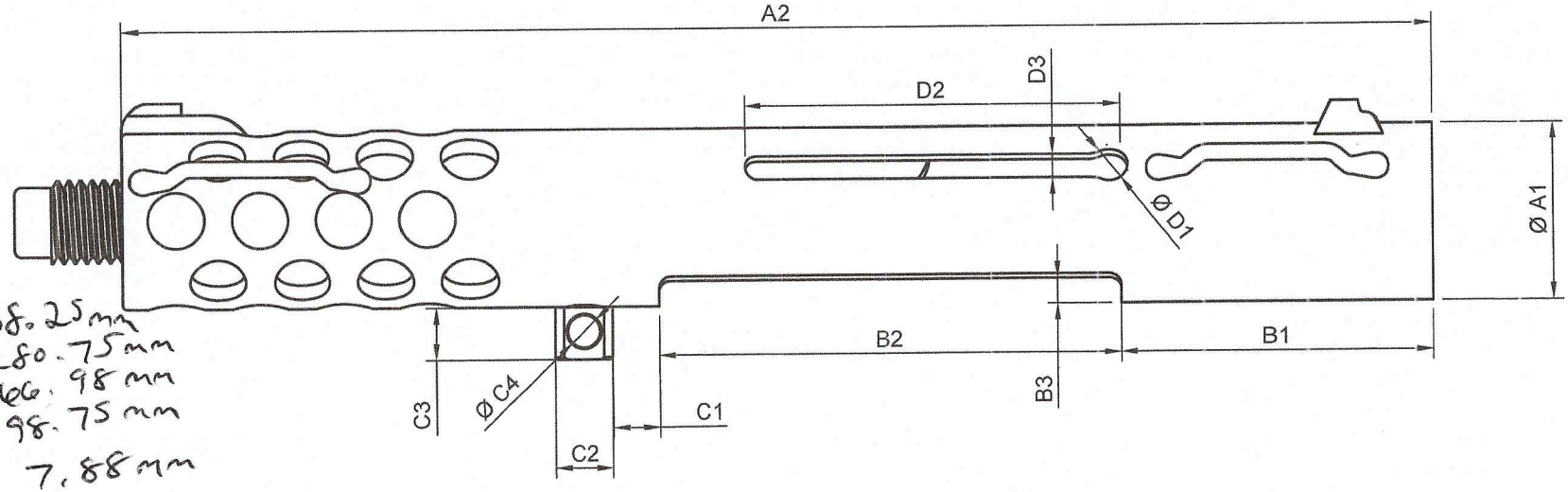

A1 - 38.25 mm
A2 - 280.75 mm
B1 - 66.98 mm
B2 - 98.75 mm
B3 - 7.88 mm
C1 - 10.54 mm
C2 - 12.80 mm
C3 - 11.50 mm
C4 - 6.25 mm
D1 - 9.50 mm
D2 - 81.49 mm
D3 - 6.20 mm

Dept. 3d2a	Technical reference Czech mine	Created by NA 6/7/2025	Approved by KF
no threaded end cap		Document type Drawing	Document status Active
		Title KG99	DWG No. KG99.STEP
			Rev. 1 / Date of issue 6/20/25 / Sheet 1/7

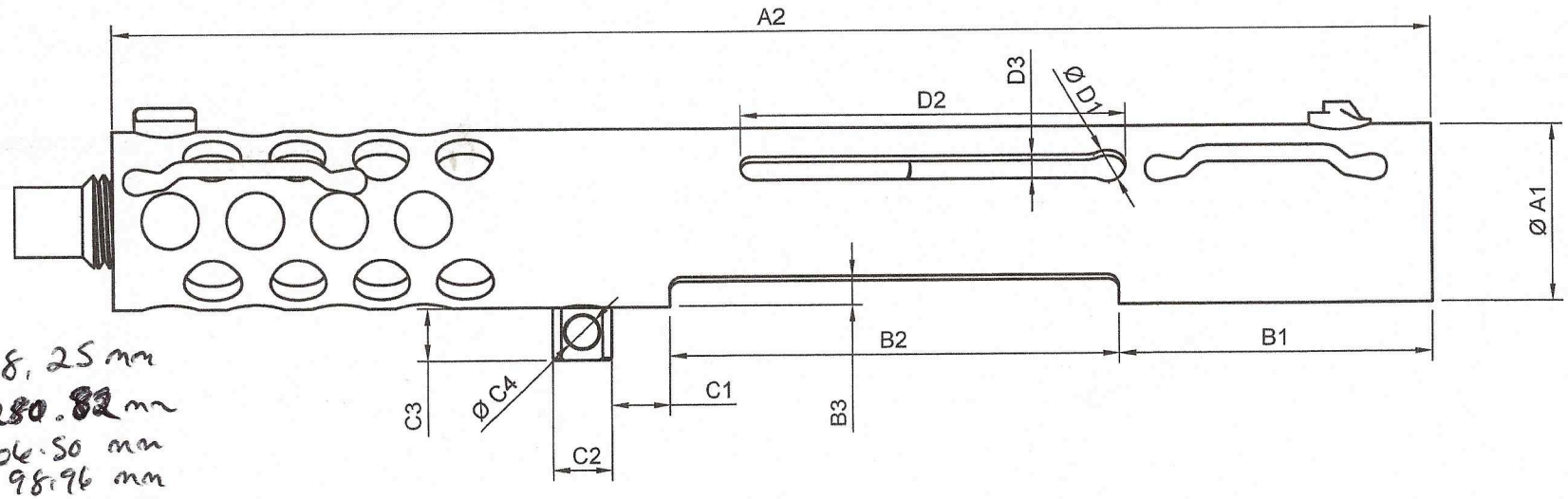

A1 - 38.25 mm
A2 - 280.82 mm
B1 - 66.50 mm
B2 - 98.96 mm
B3 - 7.81 mm
C1 - 10.30 mm
C2 - 12.75 mm
C3 - 11.29 mm
C4 - 6.07 mm
D1 - 9.38mm
D2 - 81.43mm
D3 - 6.33mm

Dept. 3d 29	Technical reference Czechrive	Created by NA 6/7/2025	Approved by KF
		Document type Drawing	Document status Active
		Title EARLY BUTTON	DWG No. EarlyTecButtonSightsSTEP
			Rev. 1 / Date of issue 6/20/25 / Sheet 2/7

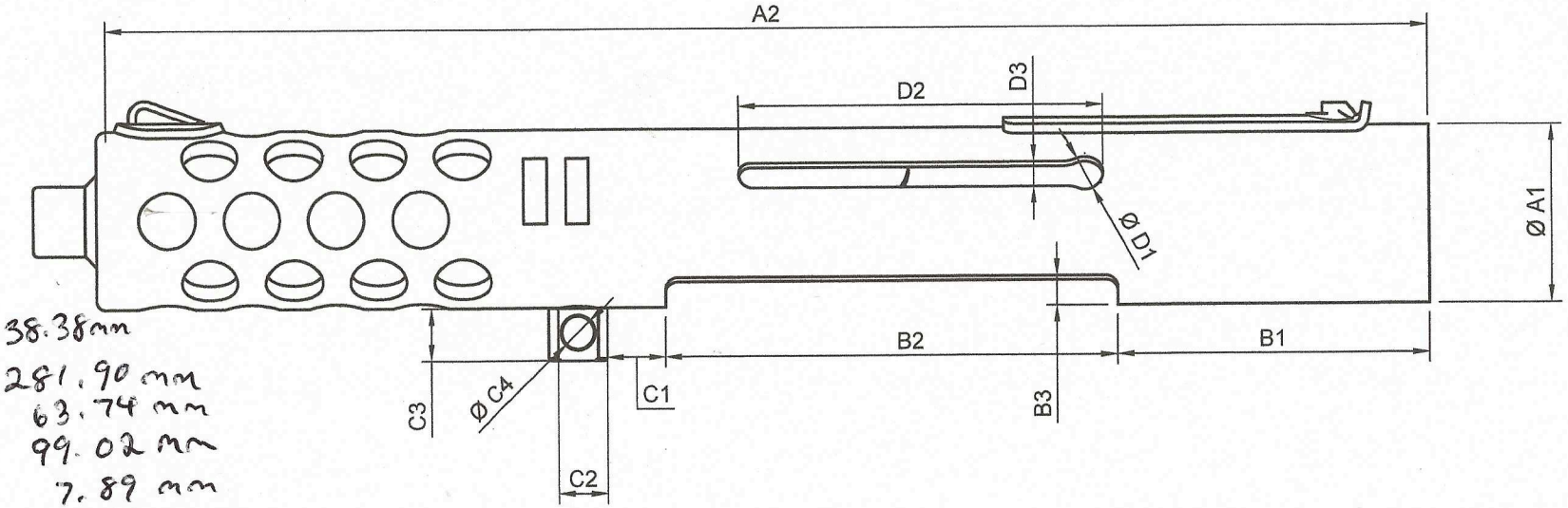

A1 - 38.38mm
A2 - 281.90 mm
B1 - 63.74 mm
B2 - 99.02 mm
B3 - 7.89 mm
C1 - 10.43 mm
C2 - 13.11 mm
C3 - 11.63 mm
C4 - 6.37 mm
D1 - 9.34 mm
D2 - 79.95 mm
D3 - 6.29 mm

Dept. 3d29	Technical reference czechwire	Created by NA 6/7/2025	Approved by KF
		Document type Drawing	Document status Active
		Title DC9	DWG No. DC9-STEP
			Rev. 1 / Date of issue 6/20/25 / Sheet 3/7

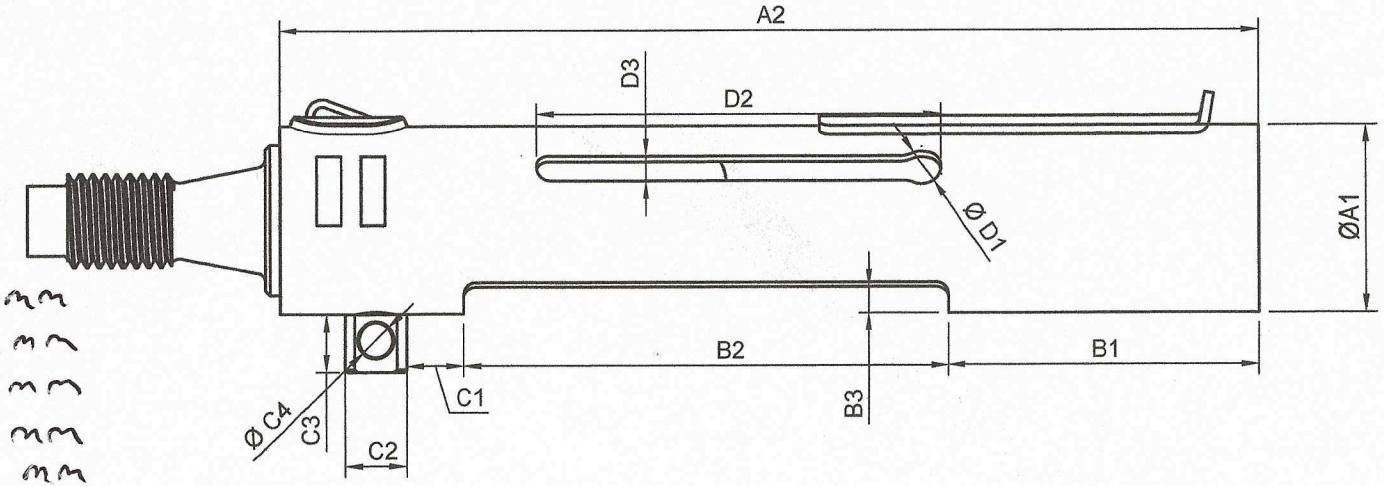

A1 – 38.25 mm
A2 – 198.79 mm
B1 – 63.65 mm
B2 – 99.10 mm
B3 – 7.70 mm
C1 – 11.12 mm
C2 – 12.69 mm
C3 – 11.89 mm
C4 – 6.15 mm
D1 – 9.55 mm
D2 – 80.39 mm
D3 – 6.36 mm

Dept. 3d2a	Technical reference Czechwire	Created by NA 6/7/2025	Approved by KF
		Document type Drawing	Document status Active
		Title TEC9 MINI DOUBLE	DWG No. TwoStripedMiniDouble STEP
			Rev. 1 / Date of issue 6/20/25 / Sheet 4/7

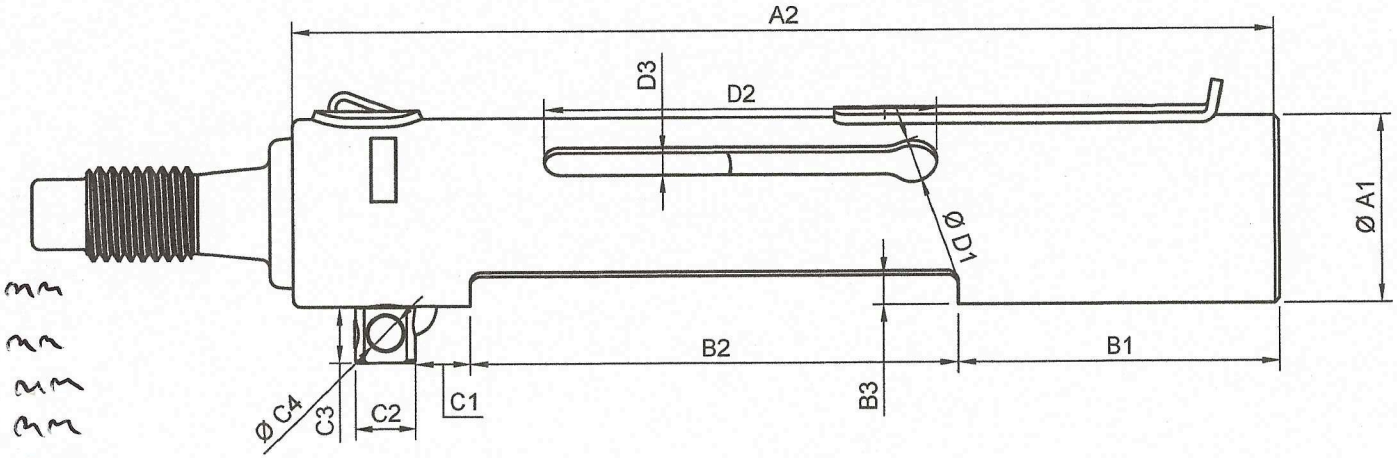

A1 - 38.35 mm
A2 - 199.53 mm
B1 - 65.19 mm
B2 - 99.17 mm
B3 - 8.07 mm
C1 - 11.48 mm
C2 - 12.78 mm
C3 - 12.40 mm
C4 - 6.19 mm
D1 - 9.36 mm
D2 - 79.96 mm
D3 - 6.44 mm

Dept. 3d29	Technical reference czech mine	Created by NA 6/7/2025	Approved by KF
		Document type Drawing	Document status Active
		Title TEC9 MINI SINGLE	DWG No. Tec9mini.STEP
			Rev. 1 / Date of issue 6/20/25 / Sheet 5/7

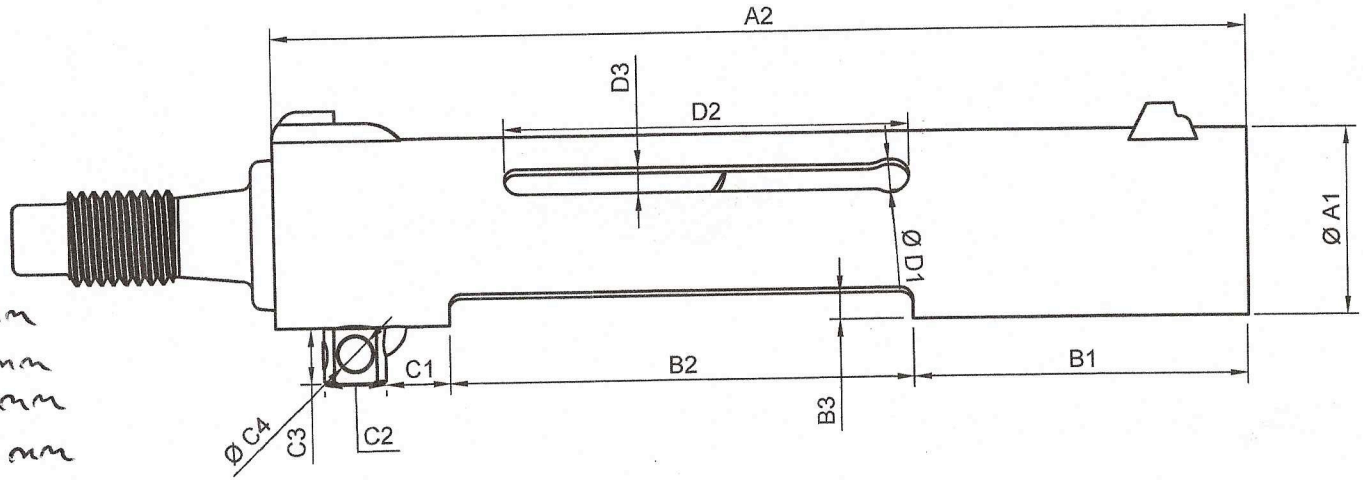

A1 – 38.18 mm
A2 – 197.60 mm
B1 – 66.81 mm
B2 – 98.42 mm
B3 – 8.07 mm
C1 – 10.81 mm
C2 – 12.70 mm
C3 – 11.64 mm
C4 – 6.20 mm
D1 – 9.43 mm
D2 – 81.12 mm
D3 – 6.41 mm

Dept. 3d/29	Technical reference czech mine	Created by NA 6/7/2025	Approved by KF
no threaded end cap		Document type Drawing	Document status Active
		Title KG99 MINI	DWG No. KG99mini.STEP
			Rev. 1 / Date of issue 6/20/25 / Sheet 6/7

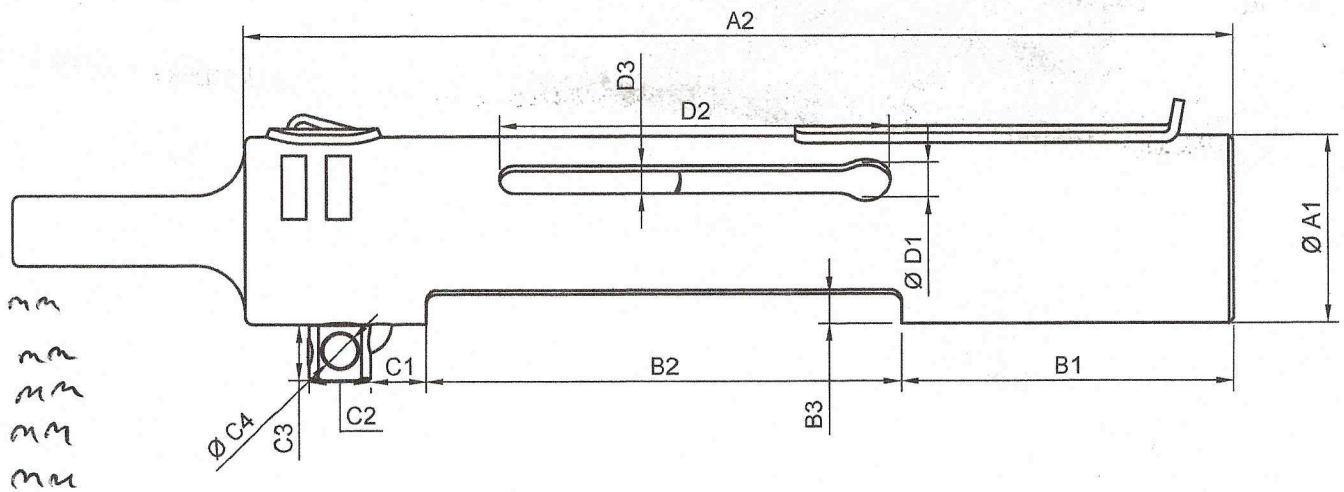

A1 – 38.15 mm
A2 – 198.64 mm
B1 – 64.49 mm
B2 – 98.82 mm
B3 – 7.59 mm
C1 – 10.75 mm
C2 – 12.83 mm
C3 – 11.74 mm
C4 – 6.37 mm
D1 – 9.55 mm
D2 – 79.89 mm
D3 – 6.43 mm

Dept. 3d2g	Technical reference Czech Mine	Created by NA 6/7/2025	Approved by KF
		Document type Drawing	Document status Active
		Title AB10	DWG No. AB10.STEP
			Rev. 1 / Date of issue 6/20/25 / Sheet 7/7