Chapter

Modeling of Photovoltaic Module

Rakeshkumar Mahto and Reshma John

Abstract

A Photovoltaic (PV) cell is a device that converts sunlight or incident light into direct current (DC) based electricity. Among other forms of renewable energy, PV-based power sources are considered a cleaner form of energy generation. Due to lower prices and increased efficiency, they have become much more popular than any other renewable energy source. In a PV module, PV cells are connected in a series and parallel configuration, depending on the voltage and current rating, respectively. Hence, PV modules tend to have a fixed topology. However, in the case of partial shading, mismatching or failure of a single PV cell can lead to many anomalies in a PV module's functioning. If proper attention is not given, it can lead to the forward biasing of healthy PV cells in the module, causing them to consume the electricity instead of producing it, hence reducing the PV module's overall efficiency. Hence, to further the PV module research, it is essential to have an approximate way to model them. Doing so allows for understanding the design's pros and cons before deploying the PV module-based power system in the field. In the last decade, many mathematical models for PV cell simulation and modeling techniques have been proposed. The most popular among all the techniques are diode based PV modeling. In this book chapter, the author will present a double diode based PV cell modeling. Later, the PV module modeling will be presented using these techniques that incorporate mismatch, partial shading, and open/short fault. The partial shading and mismatch are reduced by incorporating a bypass diode along with a group of four PV cells. The mathematical model for showing the effectiveness of bypass diode with PV cells in reducing partial shading effect will also be presented. Additionally, in recent times besides fixed topology of series–parallel, Total Cross-Tied (TCT), Bridge Link (BL), and Honey-Comb (H-C) have shown a better capability in dealing with partial shading and mismatch. The book chapter will also cover PV module modeling using TCT, BL, and H-C in detail.

Keywords: photovoltaics, complementary metal oxide semiconductor (CMOS), bypass diode, partial shading, metal oxide semiconductor field effect transistor (MOSFET)

1. Introduction

A Photovoltaic (PV) cell is a device that by the principle of photovoltaics effect converts solar energy into electricity [1, 2]. In a PV module, PV cells are connected in a series and parallel configuration, depending on the voltage and current rating, respectively [1]. In recent times PV based energy is gaining prominence due to the advances in the PV cells [3, 4], lowering PV cells cost [5], and government incentives [6–8]. Compared to any other renewable energy-based power source, PV is

IntechOpen

considered portable and easy to use [5]. Hence, the PV based power source is used in a wide range of applications that include residential and commercial building, drones, vehicle, satellites, embedded systems, sensors and many others [9].

The PV-based power source is not ideal and performance can cause many anomalies [10, 11]. One of the most significant issues that affect PV modules performance is the shading caused due to clouds, physical objects, and living beings [10, 11]. Generally, there are two types of shading, complete shading and partial shading [12]. The complete shading occurs when the whole PV module is under the shade. If only a few of the PV cells are under the shade, it results in partial shading conditions. Both of these shading types reduce the power efficiency of PV modules. However, the partial shading condition can have much more severe after effects [13]. The current flow in a row of PV cells connected in series is governed by the PV cells that are affected by the shade [13, 14]. This phenomenon can lead to forward biasing of unshaded PV cells, leading to them consuming the power instead of generating it [13, 14].

Additionally, the partial shading condition can cause hotspot generation in the panel's neighboring PV cells [15–17]. This hotspot can even instigate a fire hazard [18–20]. Mismatch in the PV cells in the PV module can also create abnormalities like the partial shading conditions [14]. Hence, to prevent such a phenomenon from happening, the PV modules are equipped with bypass and blocking diode [2, 9, 21]. The bypass diode causes bypassing of the shaded or damage PV cells in the panel [22]. Simultaneously, the blocking diode prevents the current from flowing in the reverse direction in case of a mismatch in the output voltage, which can lead to forward basing of the PV cells [21]. Similarly, faults such as open and short circuiting of PV cells in the module degenerate the solar panel's performance [12].

Due to all these abnormalities that reduce the PV panel's performance, it is desirable to model a PV module that can emulate its electrical characteristics to derive a better way to tackle them. Also, equivalent modeling helps to better understand the PV panel characteristics before they are being deployed for real-world applications.

2. SPICE based PV cell and module modeling

2.1 Equivalent circuit model of a PV cell

To model the PV cell, a SPICE based 2-diode based equivalent circuit is used as shown in **Figure 1** [23]. All the parameters shown in **Figure 1**, are presented in **Table 1** [23]. Two diode-based PV cell modeling techniques are selected over single diodes since they are considered more accurate [24]. The resistance Rs and Rp as shown in **Figure 1** are the internal resistance of the PV Cell.

The current i_{PV} *ge*nerated by the PV cell, as shown in **Figure 1**, can be computed by:

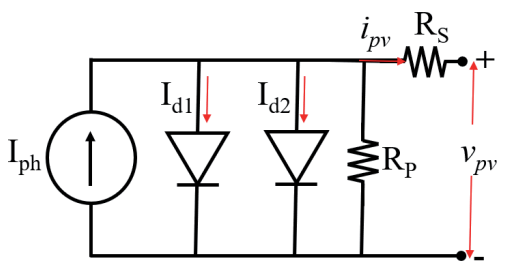

Figure 1.
2-diode based equivalent PV cell model.

Symbol	Description	Value and units
V_{PV}	Output voltage across the PV module	Volts
I_{PV}	Output current across the PV module	Amperes
v_{pv}	Output voltage across a PV cell	Volts
i_{pv}	Output current generated from the PV cell	Amperes
V_{OV}	Open load voltage across PV module	Volts
v_{ov}	Open load voltage across PV cell	0.55 Volts
I_{PH}	Total photon current of the PV module	2.17 Amperes
R_P	Shunt resistor	1 mΩ
R_S	Series resistor	0.1 MΩ
A_{PV}	Area of PV cell	126.6 cm^2
J_{SC}	Short-circuit current density	34.3 mA/cm^2
V_T	Thermal voltage = KT / q	26 mV
A	Diode ideality constant	1.2
I_S	Diode saturation current	I_{S1} = 10pA and I_{S2} = 1 nA
G	Solar irradiation data	1000 W/m^2
G_{Sh}	Shaded solar irradiation data	500 W/m^2
N_S	Number of PV cells in series	
N_P	Number of PV cells in parallel	
N	Number of PV cells in a PV panel = N_S x N_P	

Table 1.
The parameters descriptions for modeling PV cells and module, their assumed constant value, and units.

$$i_{PV} = I_{ph} - I_{d1} - I_{d2} - \frac{v_{PV} + i_{pv} R_S}{R_P} \tag{1}$$

Where the I_{d1} and I_{d2} can be computed by:

$$I_d = I_s \left(e^{\left(\frac{v_{PV} + i_{pv} R_S}{A \times V_T} \right)} - 1 \right) \tag{2}$$

The total photon current of a PV cell is dependent on the area of the PV cell, short-circuit current density of the PV cell, and the solar irradiance. The following equation can compute the total photon current for a given PV cell:

$$I_{Ph} = A_{PV} \times J_{SC} \times \frac{G}{G_{Sh}} \tag{3}$$

The current vs. voltage (I-V) and power vs. voltage (P-V) characteristics obtained for a single PV cell using SPICE-based equivalent PV cell are shown in **Figure 2**. The SPICE simulation uses Eq. (1), Eq. (2), and Eq. (3).

2.2 Equivalent modeling of PV module

A series–parallel topology is used to model a PV module using the equivalent PV cell shown in **Figure 1**. The total number of PV cells in the PV panel is equal to N. The number of PV cells connected in series is equal to Ns. The Ns number of series connected PV cells are then tied together to form a PV panel or module. The total number of PV cells connected in parallel is equal to Np. Thus, the number of PV cells in a PV module is given by:

$$N = N_S \times N_P \tag{4}$$

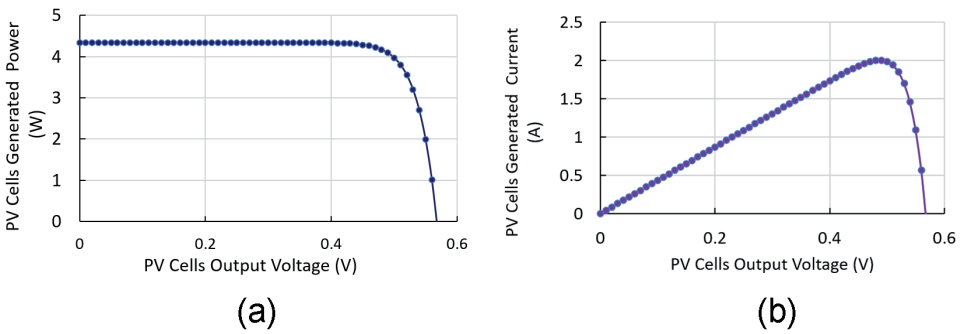

Figure 2.
a) Current vs. voltage (I-V) characteristics of PV cell b) power vs. voltage (P-V) characteristics of PV cell.

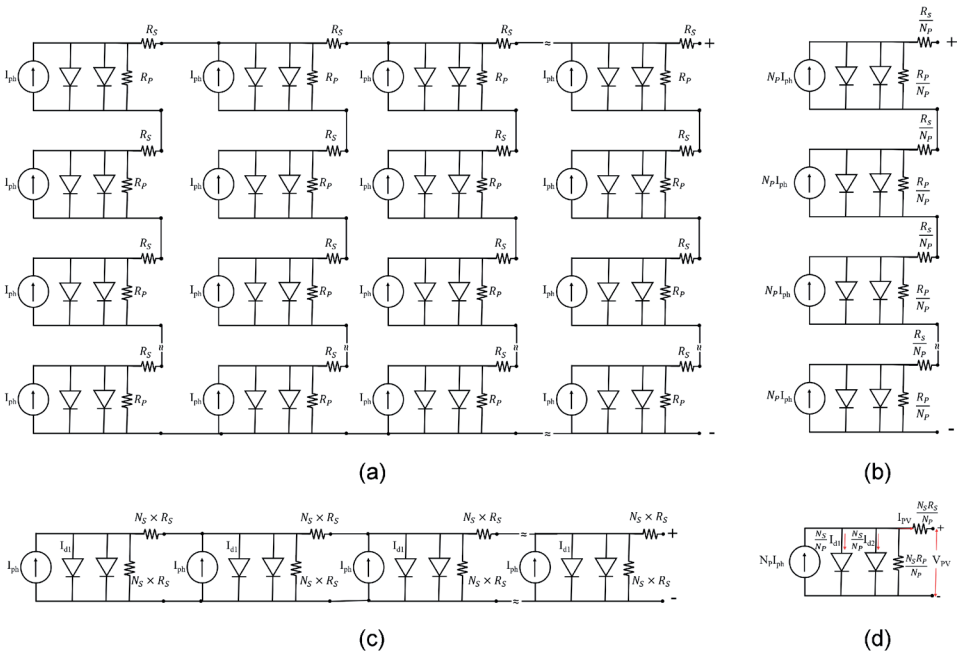

Figure 3.
A PV module of Ns x Np (number of PV cells in series x number of PV cells in parallel) configuration a) double-diode based equivalent PV module b) column decomposition c) row decomposition d) approximate equivalent model.

If all the PV cells in a PV module are homogenous and are receiving an identical solar irradiance, it can be modeled in **Figure 3** [25]. The total current generated from the PV module with Ns number of PV cells in series and Np number of PV cells in parallel can be modeled by using Eq. (1) and the equivalent double diode based model shown in **Figure 3d)**.

The photon current shown in **Figure 3** is given by the summation of photon current across each column in the PV module. Thus, the total photon current of a PV module is equal to the Np times the single PV cell's photon current. In the partial shading in the PV module, the current across the series connected PV cell is determined by the current generated from the shaded PV cells. Thus, in this case, the PV module's total photon current is not equal to Np times the photon current. Instead, it is given by Eq. (5).

$$Total\ I_{PH} = \sum_{i=1}^{N_P} min\left(I_{Ph}\right) \tag{5}$$

3. Different types of topologies for creating a PV module and effect of shading

3.1 Fixed topology

Typically, the topology used for creating PV modules from a single PV cell is mostly fixed. To reduce the partial shading and mismatch impact, bypass diode is connected across PV cells in the panel to reduce its impact on power generation [22]. To reduce the effect of partial shading condition, different techniques of placing bypass diode were analyzed [26]. However, they make the PV module much more complicated for mass production. There are different topologies of connecting PV cells in the module and these are important for understanding the effectiveness of different topologies for mitigating the ailing effect of partial shading condition, the shading pattern shown in **Figure 4** is used [27]. For simplifying the simulation, the number of series connected PV cells is equal to 4, and the number of parallel connected PV cells is 5, i.e., N_S is equal to 4 and N_P is equal to 5. Thus, the total number of PV cells in the PV module is considered 20, as shown in **Figure 4**.

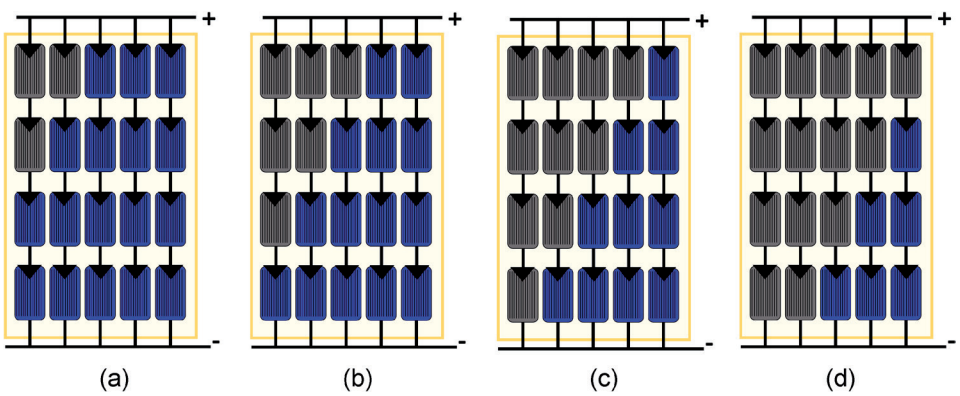

Figure 4.
Different shading pattern a) 10% b) 25% c) 50% d) 75%.

3.1.1 Series–parallel (SP)

The SP PV module configuration is the easiest and simplest way of creating a PV module. As discussed earlier, it is created by connecting solar cells in series. The total number of PV cells connected in series is dependent on the total voltage ratings of the PV module. Later, a similar configuration of series connected PV cells is connected in parallel based on the PV module's current and power rating. A bypass diode is connected across each PV cell in the module (**Figure 5a**). The I-V and P-V characteristics of the PV module using the SPICE based PV is shown in **Figure 5a)** and **b)**, respectively.

3.1.2 Total crossed-tied (TCT)

The TCT topology for the PV module is like the SP. The only difference is that each PV cell is connected in parallel with the neighboring PV cells in that column [28–31]. The neighboring PV cells in the module are shorted together as per **Figure 6a)** for modeling this configuration. The I-V and P-V characteristics for different shading condition is shown in **Figure 6b)** and **c)**.

3.1.3 Bridge linked (BL)

Figure 7a) shows the 20 PV cells-based module connected in BL configuration. The I-V and P-V characteristics obtained through the SPICE PV module is shown in **Figure 7b)** and **c)**. This configuration got the name since the module's PV cells are connected like a bridge rectifier [28–31]. In this configuration, two or more PV cells

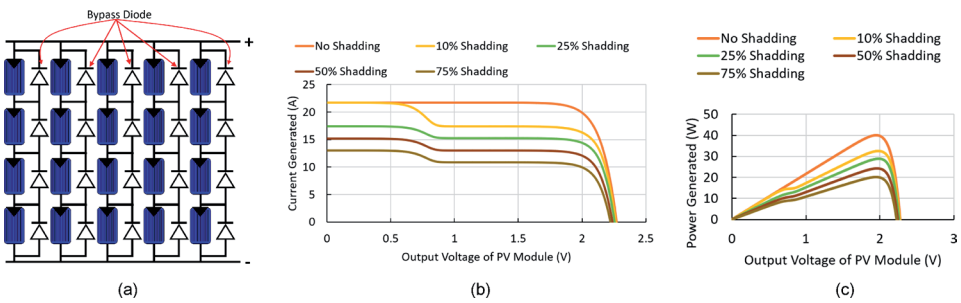

Figure 5.
The PV module connected in SP topology. a) the configuration of PV module is 4 × 5 b) I-V characteristics of PV module c) P-V characteristics of PV module under different shading condition.

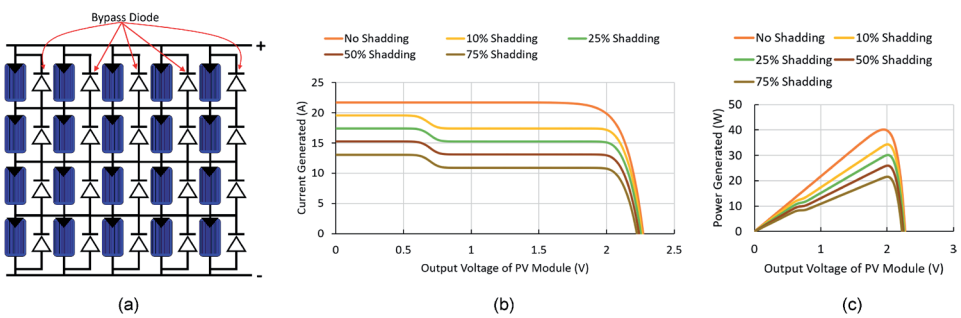

Figure 6.
The PV module connected in TCT topology. a) the configuration of PV module is 4 × 5 b) I-V characteristics of PV module c) P-V characteristics of PV module under different shading condition.

that are connected in series are tied with neighboring two or more PV cells in parallel. For simplicity a bypass diode is connected across each PV cells in the module.

3.1.4 Honeycomb (HC)

PV cells are connected in a hexagonal shape in this configuration, creating a honey bee house like structure [28–31]. Hence, six PV cells are connected together to form a hexagon as shown in **Figure 8a)**. The I-V and P-V characteristics obtained using the SPICE-based PV cell are shown in **Figure 8b)** and **c)**.

3.2 Reconfigurable PV module

It is shown in different research work the ways different fixed PV cell topologies mitigate the effect of partial shading and mismatch [28–31]. The usage of bypass diode achieves the effectiveness of fixed topologies. However, a fault in the bypass diodes can make various topologies for creating PV modules ineffective. Compared to using bypass diode, a novel complementary metal-oxide-semiconductor (CMOS) switch embedded PV module is proposed [32]. Thus having CMOS based switches the PV modules configuration, i.e., the number of PV cells in series vs. the number of PV cells in parallel, can be changed in real time [12, 32] in case of a fault in PV cells or partial shading condition. A CMOS embedded PV module is shown in **Figure 9**. The circuit diagram of the switches used is presented in detailed in [33].

In [27], it is presented that reconfigurable PV modules are much better in tackling the effect partial shading condition. However, it is also shown on the resistance of metal oxide semiconductor field-effect transistor (MOSFET) can reduce the

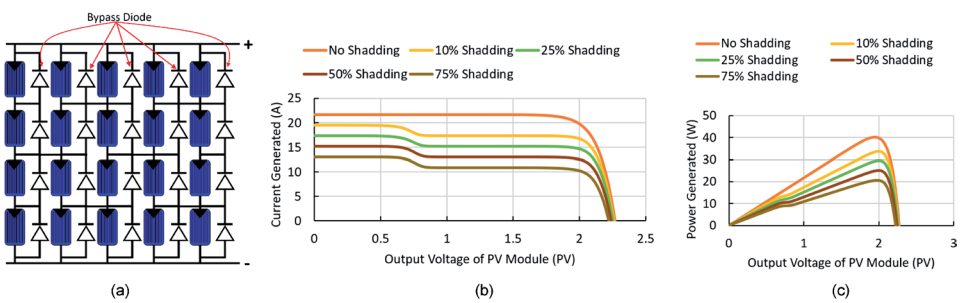

Figure 7.
The PV module connected in BL topology. a) the configuration of PV module is 4 × 5 b) I-V characteristics of PV module c) P-V characteristics of PV module under different shading condition.

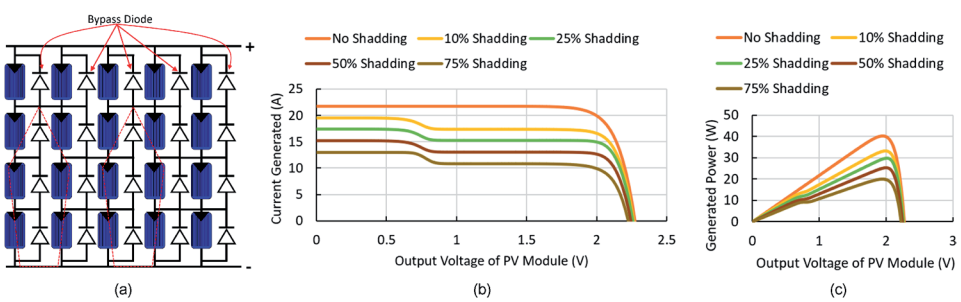

Figure 8.
The PV module connected in HC topology. a) the configuration of PV module is 4 × 5 b) I-V characteristics of PV module c) P-V characteristics of PV module under different shading condition.

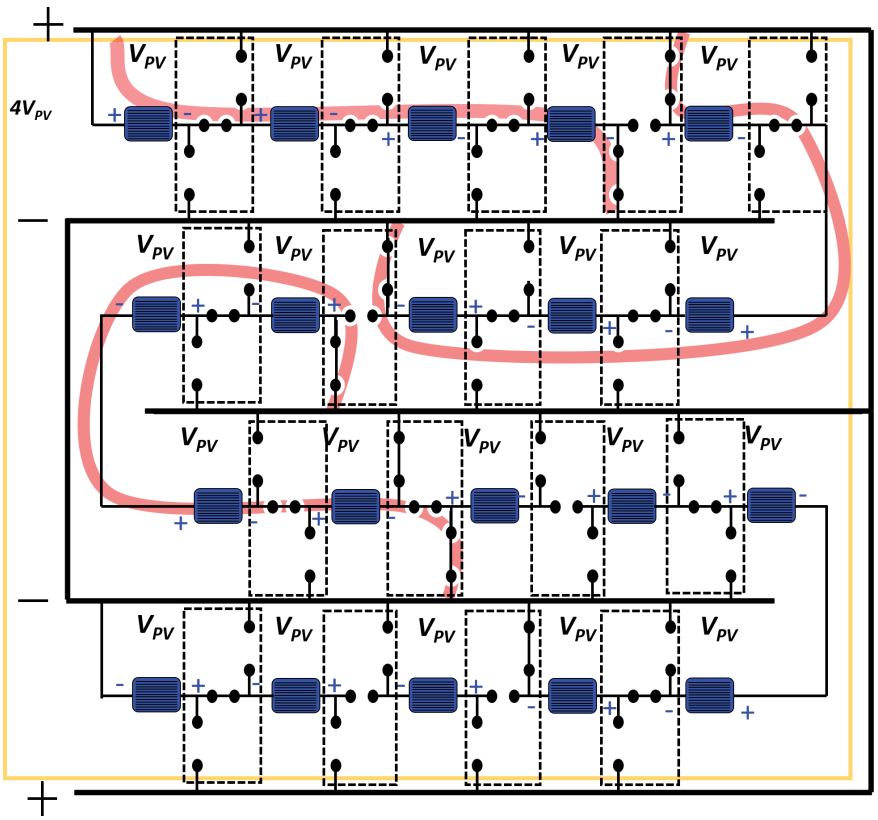

Figure 9.
CMOS switch embedded PV module. A group of four transistors are connected in series by turning ON and OFF CMOS based transistors.

effectiveness of the CMOS embedded PV module. Hence, it is a necessity to develop a modeling technique for reconfigurable PV modules for further development and deployment of their usage in various applications. Three different types of MOSFETs are used for modeling the reconfigurable, which is presented in **Table 2** [12].

The array decomposition for modeling the CMOS embedded PV module is shown in **Figure 10**. For simplicity, the two diodes are combined into a single diode shown in **Figure 10**. The total current generated by the reconfigurable PV module in configuration Ns × Np (number of PV cells in series x number of PV cells in parallel) is given by [33]:

$$I_{PV} \approx N_P \left[I_{ph} - I_{d1} - I_{d2} - \frac{B}{R_P} \right] \tag{6}$$

$$I_d = I_s \left(e^{\left(\frac{B}{A \times V_T}\right)} - 1 \right) \tag{7}$$

$$B = \frac{v_{pv}}{N_S} + i_{pv} \left(\frac{R_S}{N_P} + \frac{(N_S - 1) \cdot R_T}{N_P \cdot N_S} + \frac{2 \cdot R_{ns}}{(N_P - 1) \cdot N_S} \right) \tag{8}$$

In Eq. (8), the R_{ns} is equal to R_{PS}. It is possible to achieve it by sizing the N-type and P-type MOSFET transistor's width based on the process transconductance. The

Symbol	Description	Value and units
R_{Ps}	ON resistance of P-type MOSFET transistor	1mΩ
R_T	ON resistance of transmission gate transistor	1mΩ
R_{ns}	ON resistance of N-type MOSFET transistor	1mΩ

Table 2.
CMOS transistors resistance variable name and values.

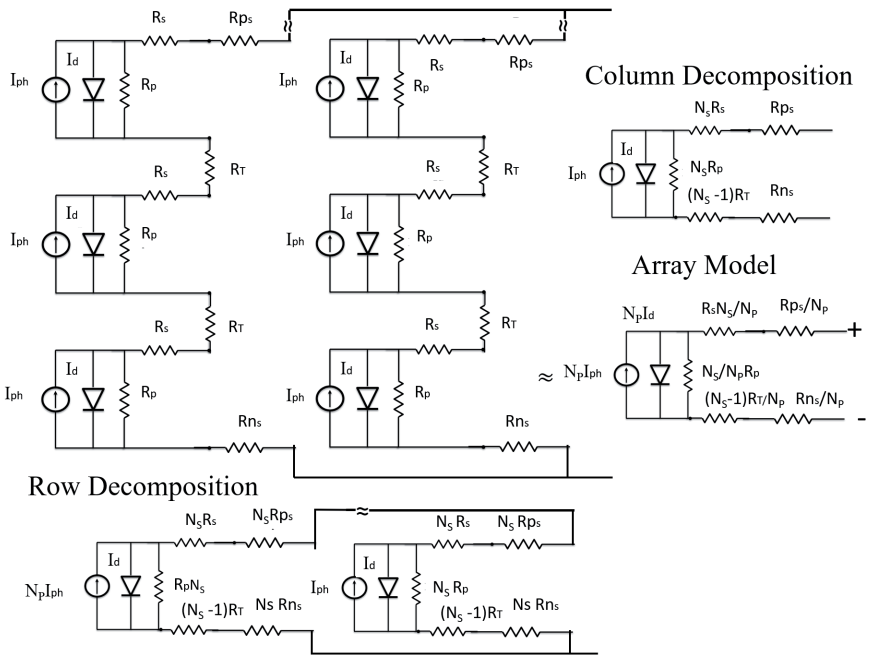

Figure 10.
PV cell decomposition technique for modeling CMOS embedded PV module.

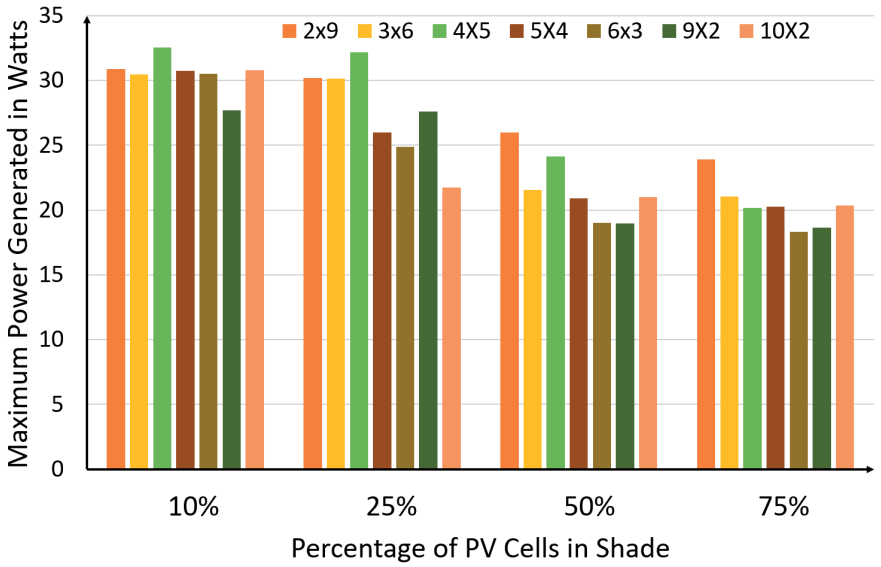

Figure 11.
The maximum power under different shading patterns over PV module for different configurations (number of PV cells in series x number of PV cells in parallel).

maximum power generated by the CMOS embedded PV module using SPICE based simulation is shown in **Figure 11**.

4. Conclusions

The authors have presented SPICE based modeling of PV cells and modules in detail. The I-V and P-V characteristics of popular fixed topologies for creating PV modules using SPICE modeling are presented. The contribution presented in this work will be significant in creating a smarter PV module that can better able to reduce the impact of partial shading, mismatch, and open/short fault.

In recent times many research works are done on creating a reconfigurable PV module. The modeling technique shown in the chapter presented the modeling technique of the reconfigurable PV module. These silicon switches embedded PV modules have the capability to create futuristic smart PV panels. Hence, for studying their performance in different operating conditions, the modeling technique presented in this chapter will be significant for their acceptance in different applications.

Conflict of interest

The authors declare no conflict of interest.

Author details

Rakeshkumar Mahto* and Reshma John
Computer Engineering Program, California State University, Fullerton, CA, USA

*Address all correspondence to: ramahto@fullerton.edu

IntechOpen

© 2021 The Author(s). Licensee IntechOpen. This chapter is distributed under the terms of the Creative Commons Attribution License (http://creativecommons.org/licenses/by/3.0), which permits unrestricted use, distribution, and reproduction in any medium, provided the original work is properly cited.

References

[1] Reinders A, Sark W van, Verlinden P. Introduction. Photovoltaic Solar Energy. John Wiley & Sons, Ltd; 2016. pp. 1-12. doi:10.1002/9781118927496.ch1

[2] PVEducation. [cited 17 Feb 2021]. Available: https://www.pveducation.org/

[3] Shubbak MH. Advances in solar photovoltaics: Technology review and patent trends. Renew Sustain Energy Rev. 2019;115: 109383. doi:10.1016/j.rser.2019.109383

[4] Garnett EC, Ehrler B, Polman A, Alarcon-Llado E. Photonics for Photovoltaics: Advances and Opportunities. ACS Photonics. 2021;8: 61-70. doi:10.1021/acsphotonics.0c01045

[5] Green MA. How Did Solar Cells Get So Cheap? Joule. 2019;3: 631-633. doi:10.1016/j.joule.2019.02.010

[6] Ding H, Zhou DQ, Liu GQ, Zhou P. Cost reduction or electricity penetration: Government R&D-induced PV development and future policy schemes. Renew Sustain Energy Rev. 2020;124: 109752.

[7] Singh R, Tripathi P, Yatendra K. Impact of Solar Photovoltaic Penetration In Distribution Network. 2019 3rd International Conference on Recent Developments in Control, Automation Power Engineering (RDCAPE). 2019. pp. 551-556. doi:10.1109/RDCAPE47089.2019.8979014

[8] Dong CG, Wiser R, Rai V. Incentive pass-through for residential solar systems in California. 2014.

[9] Fraas LM, Partain LD. Solar Cells and Their Applications. John Wiley & Sons; 2010.

[10] Dewi T, Risma P, Oktarina Y. A Review of Factors Affecting the Efficiency and Output of a PV System Applied in Tropical Climate. 2018; 12.

[11] Meral ME, Dinçer F. A review of the factors affecting operation and efficiency of photovoltaic based electricity generation systems. Renew Sustain Energy Rev. 2011;15: 2176-2184. doi:10.1016/j.rser.2011.01.010

[12] Mahto R. Fault resilient and reconfigurable power management using photovoltaic integrated with CMOS switches. 2016.

[13] Bai J, Cao Y, Hao Y, Zhang Z, Liu S, Cao F. Characteristic output of PV systems under partial shading or mismatch conditions. Sol Energy. 2015;112: 41-54.

[14] Pendem SR, Mikkili S. Modelling and performance assessment of PV array topologies under partial shading conditions to mitigate the mismatching power losses. Sol Energy. 2018;160: 303-321.

[15] Wendlandt S, Drobisch A, Buseth T, Krauter S, Grunow P. Hot spot risk analysis on silicon cell modules. 25th European Photovoltaic Solar Energy Conference and Exhibition. Valencia, Spain; 2010. pp. 4002-4006.

[16] Molenbroek E, Waddington DW, Emery KA. Hot spot susceptibility and testing of PV modules. Photovoltaic Specialists Conference. Las Vegas; 1991. pp. 547-552.

[17] Skomedal \AAsmund F., Aarseth BL, Haug H, Selj J, Marstein ES. How much power is lost in a hot-spot? A case study quantifying the effect of thermal anomalies in two utility scale PV power plants. Sol Energy. 2020;211: 1255-1262.

[18] Dhere NG, Shiradkar NS. Fire hazard and other safety concerns of

photovoltaic systems. J Photonics Energy. 2012;2: 022006.

[19] Pandian A, Bansal K, Thiruvadigal DJ, Sakthivel S. Fire hazards and overheating caused by shading faults on photo voltaic solar panel. Fire Technol. 2016;52: 349-364.

[20] Laukamp H, Bopp G, Grab R, Wittwer C, Häberlin H, van Heeckeren B, et al. PV fire hazard-analysis and assessment of fire incidents. 26th EUPVSEC. 2013.

[21] Kato K, Koizumi H. A study on effect of blocking and bypass diodes on partial shaded PV string with compensating circuit using voltage equalizer. 2015 IEEE international symposium on circuits and systems (ISCAS). IEEE; 2015. pp. 241-244.

[22] Silvestre S, Boronat A, Chouder A. Study of bypass diodes configuration on PV modules. Appl Energy. 2009;86: 1632-1640.

[23] Castaner L, Silvestre S. Modelling photovoltaic systems using PSpice. John Wiley and Sons; 2002.

[24] Bana S, Saini RP. A mathematical modeling framework to evaluate the performance of single diode and double diode based SPV systems. Energy Rep. 2016;2: 171-187. doi:10.1016/j.egyr.2016.06.004

[25] Mahto R, Zarkesh-Ha P, Lavrova O. MOSFET-based modeling and simulation of photovoltaics module. 2016 IEEE 43rd Photovoltaic Specialists Conference (PVSC). 2016. pp. 3078-3081. doi:10.1109/PVSC.2016.7750231

[26] Silvestre S, Boronat A, Chouder A. Study of bypass diodes configuration on PV modules. Appl Energy. 2009;86: 1632-1640. doi:10.1016/j.apenergy.2009.01.020

[27] Mahto RV, Sharma DK, Xavier DX, Raghavan R. Improving performance of photovoltaic panel by reconfigurability in partial shading condition. J Photonics Energy. 2020;10: 042004.

[28] Yadav AS, Pachauri RK, Chauhan YK, Choudhury S, Singh R. Performance enhancement of partially shaded PV array using novel shade dispersion effect on magic-square puzzle configuration. Sol Energy. 2017;144: 780-797. doi:10.1016/j.solener.2017.01.011

[29] Wang Y-J, Hsu P-C. An investigation on partial shading of PV modules with different connection configurations of PV cells. Energy. 2011;36: 3069-3078. doi:10.1016/j.energy.2011.02.052

[30] Bingöl O, Özkaya B. Analysis and comparison of different PV array configurations under partial shading conditions. Sol Energy. 2018;160: 336-343. doi:10.1016/j.solener.2017.12.004

[31] Jazayeri M, Uysal S, Jazayeri K. A comparative study on different photovoltaic array topologies under partial shading conditions. 2014 IEEE PES T D Conference and Exposition. 2014. pp. 1-5. doi:10.1109/TDC.2014.6863384

[32] Mahto R, Lavrova O, Zarkesh-Ha P, Lester L. Reconfigurable and Programmable Photovoltaic Power for Micro Autonomous Systems. ReSpaceMAPLD 2010. 2010.

[33] Mahto R, Zarkesh-Ha P, Lavrova O. Reconfigurable photovoltaic integrated with CMOS for a fault tolerant system. 2016 IEEE 43rd Photovoltaic Specialists Conference (PVSC). IEEE; 2016. pp. 2578-2581.