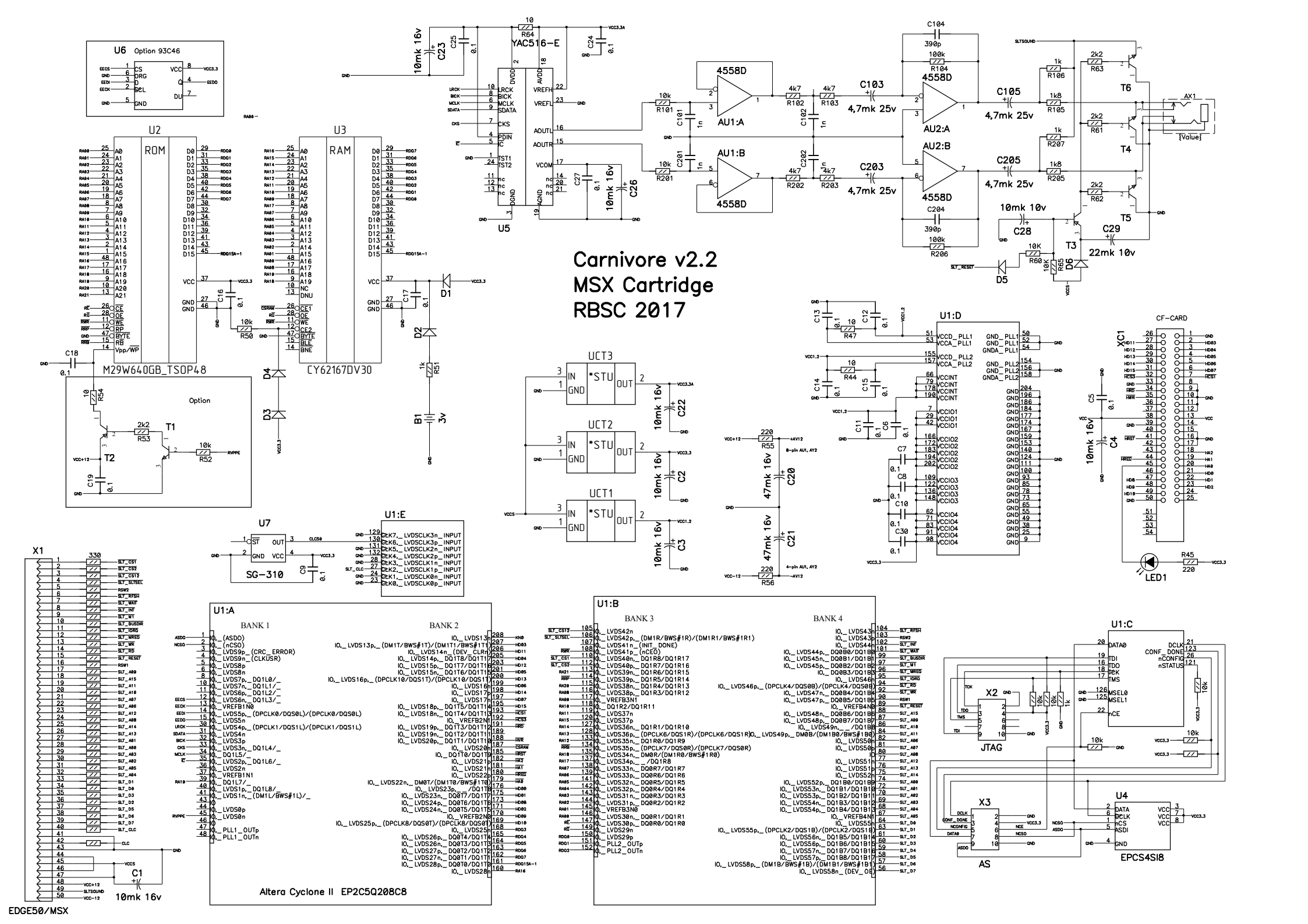
Carnivore v2.2
MSX Cartridge
RBSC 2017
U6 Option 93C46
U2 ROM
M29W640GB_TSOP48
U3 RAM
CY62167DV30
U5
YAC516-E
4558D
AU1:A
AU1:B
AU2:A
AU2:B
T1
T2
T3
T4
T5
T6
AX1
{Value}
UCT3
UCT2
UCT1
*STU
U7
SG-310
U1:E
U1:D
CF-CARD
XC1
LED1
X1
EDGE50/MSX
U1:A
BANK 1
BANK 2
Altera Cyclone II EP2C5Q208C8
U1:B
BANK 3
BANK 4
U1:C
X2
JTAG
X3
AS
U4
EPCS4SI8