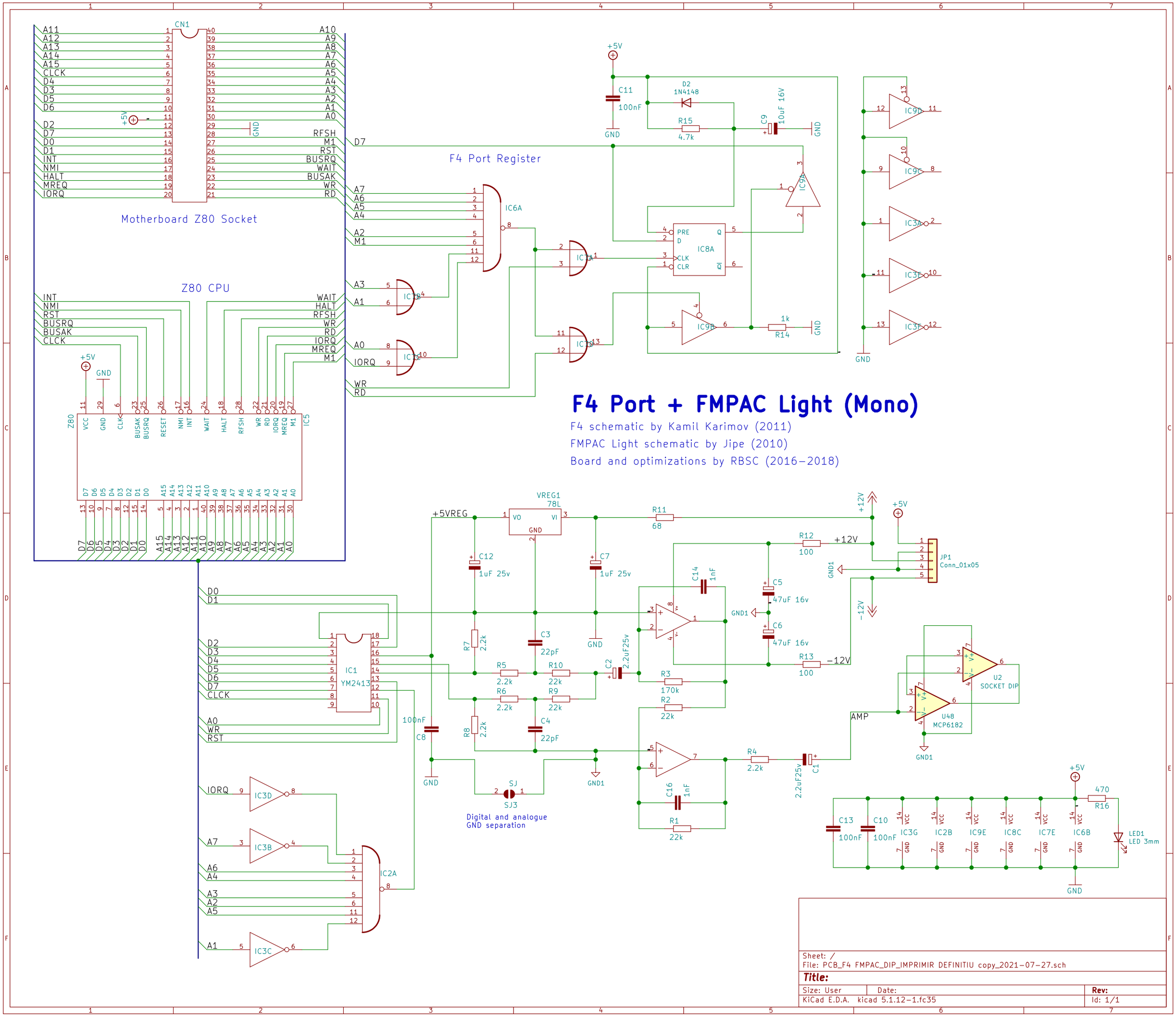
Motherboard Z80 Socket
CN1
F4 Port Register
IC6A
IC8A
IC9A
IC9B
IC9C
IC9D
IC3A
IC3E
IC3F
IC7A
IC7B
Z80 CPU
IC5
IC1
YM2413
IC2A
IC3B
IC3C
IC3D
VREG1
78L
+5VREG
JP1
Conn_01x05
U2
SOCKET DIP
U48
MCP6182
AMP
IC3G
IC2B
IC9E
IC8C
IC7E
IC6B
LED1
LED 3mm
SJ
SJ3
Digital and analogue
GND separation
F4 Port + FMPAC Light (Mono)
F4 schematic by Kamil Karimov (2011)
FMPAC Light schematic by Jipe (2010)
Board and optimizations by RBSC (2016–2018)
Sheet: /
File: PCB_F4 FMPAC_DIP_IMPRIMIR DEFINITIU copy_2021-07-27.sch
Title:
Size: User
Date:
Rev:
KiCad E.D.A. kicad 5.1.12-1.fc35
Id: 1/1