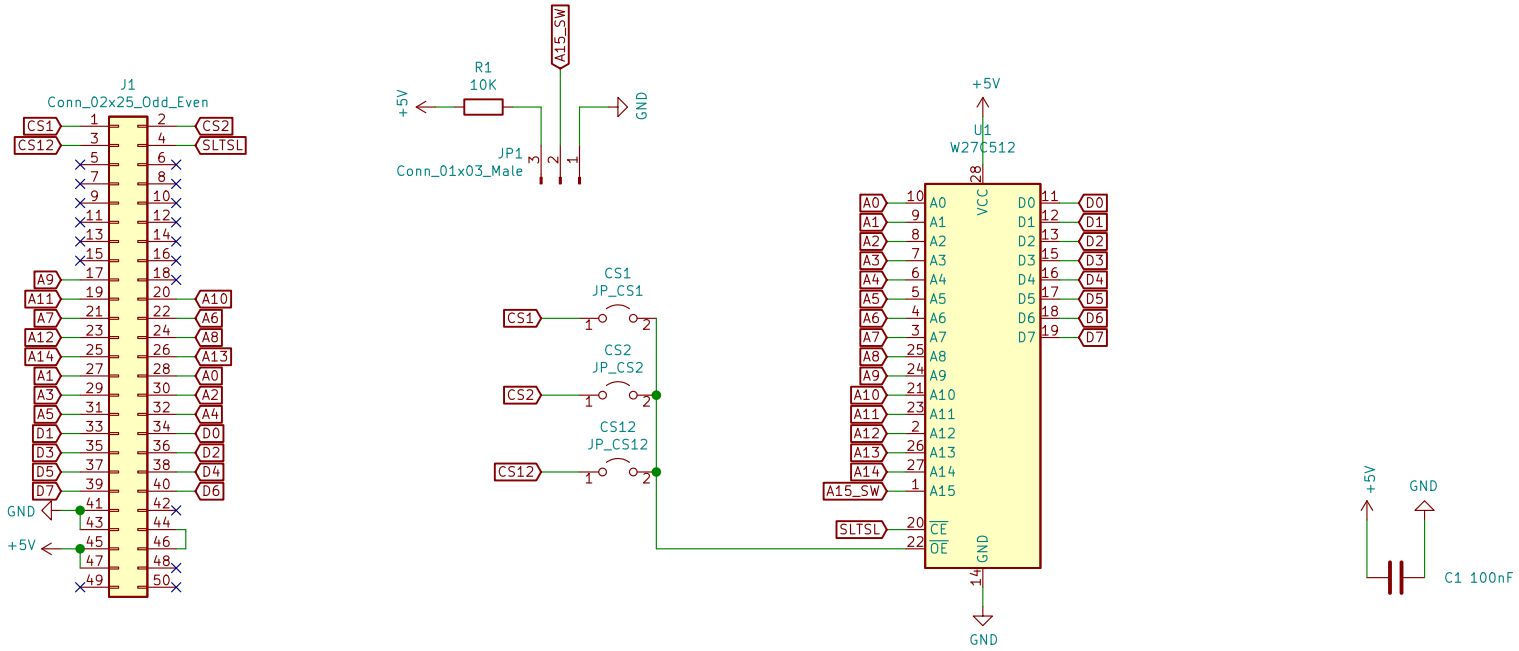

MSX Cartridge

Skoti

Sheet: /

File: spider_cart.sch

Title: Spider Cart

Size: A4	Date: 2022-01-06	**Rev: 1.2**
KiCad E.D.A. kicad (5.1.6)-1		Id: 1/1