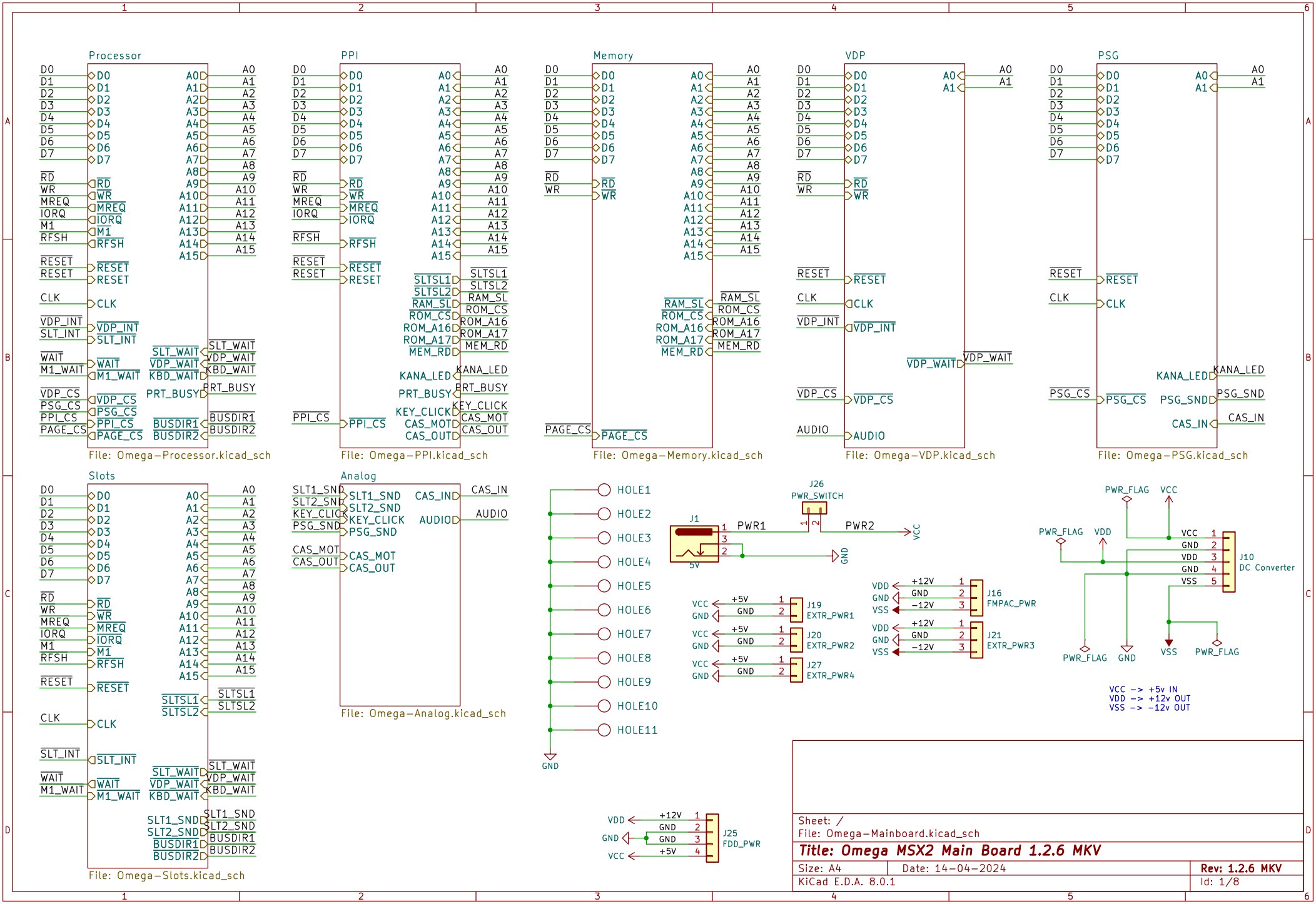
Processor
File: Omega-Processor.kicad_sch
PPI
File: Omega-PPI.kicad_sch
Memory
File: Omega-Memory.kicad_sch
VDP
File: Omega-VDP.kicad_sch
PSG
File: Omega-PSG.kicad_sch
Slots
File: Omega-Slots.kicad_sch
Analog
File: Omega-Analog.kicad_sch
HOLE1
HOLE2
HOLE3
HOLE4
HOLE5
HOLE6
HOLE7
HOLE8
HOLE9
HOLE10
HOLE11
J1
PWR1
PWR2
J26
PWR_SWITCH
J19
EXTR_PWR1
J20
EXTR_PWR2
J27
EXTR_PWR4
J16
FMPAC_PWR
J21
EXTR_PWR3
J10
DC Converter
J25
FDD_PWR
VCC -> +5v IN
VDD -> +12v OUT
VSS -> -12v OUT
Sheet: /
File: Omega-Mainboard.kicad_sch
Title: Omega MSX2 Main Board 1.2.6 MKV
Size: A4
Date: 14-04-2024
Rev: 1.2.6 MKV
KiCad E.D.A. 8.0.1
Id: 1/8

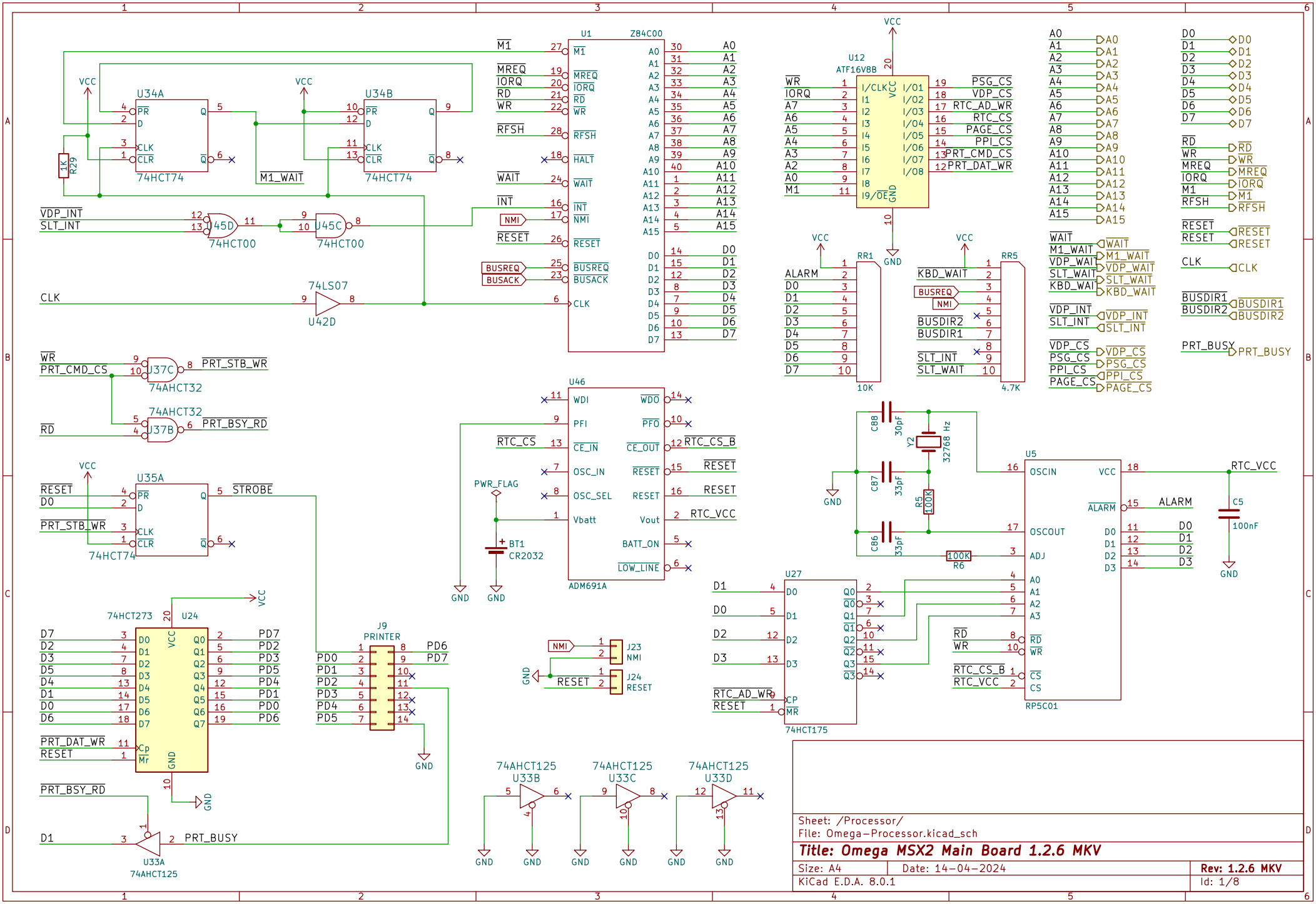
U1 Z84C00
U34A 74HCT74
U34B 74HCT74
U45D 74HCT00
U45C 74HCT00
U42D 74LS07
U12 ATF16V8B
RR1 10K
RR5 4.7K
U37C 74AHCT32
U37B 74AHCT32
U46 ADM691A
U35A 74HCT74
U24 74HCT273
J9 PRINTER
U27 74HCT175
U5 RP5C01
U33A 74AHCT125
U33B 74AHCT125
U33C 74AHCT125
U33D 74AHCT125
J23 NMI
J24 RESET
BT1 CR2032
Y2 32768 Hz
Sheet: /Processor/
File: Omega-Processor.kicad_sch
Title: Omega MSX2 Main Board 1.2.6 MKV
Size: A4
Date: 14-04-2024
Rev: 1.2.6 MKV
KiCad E.D.A. 8.0.1
Id: 1/8

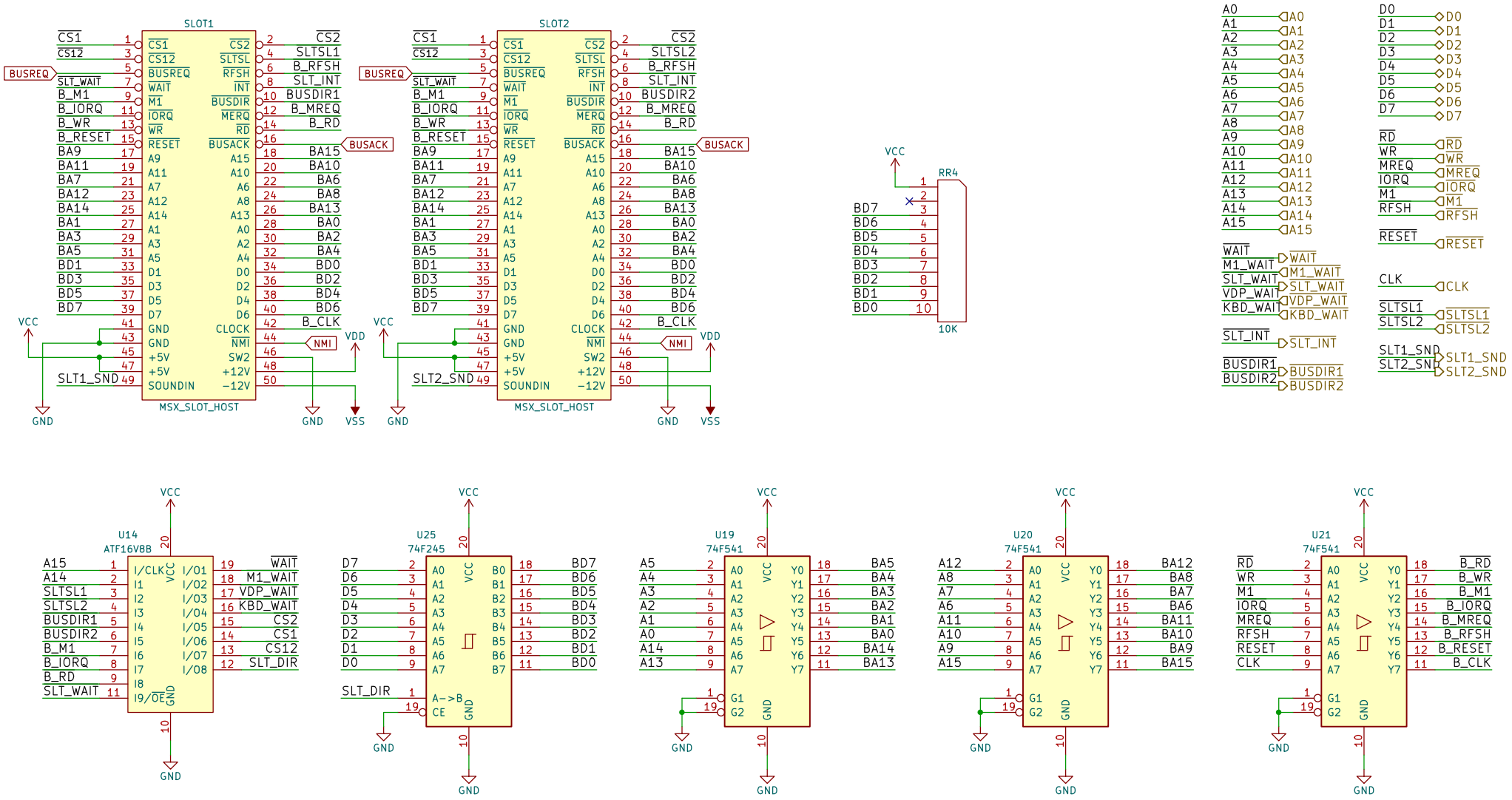

Sheet: /Slots/
File: Omega-Slots.kicad_sch

Title: Omega MSX2 Main Board 1.2.6 MKV

Size: A4	Date: 14-04-2024	Rev: 1.2.6 MKV
KiCad E.D.A. 8.0.1		Id: 1/8

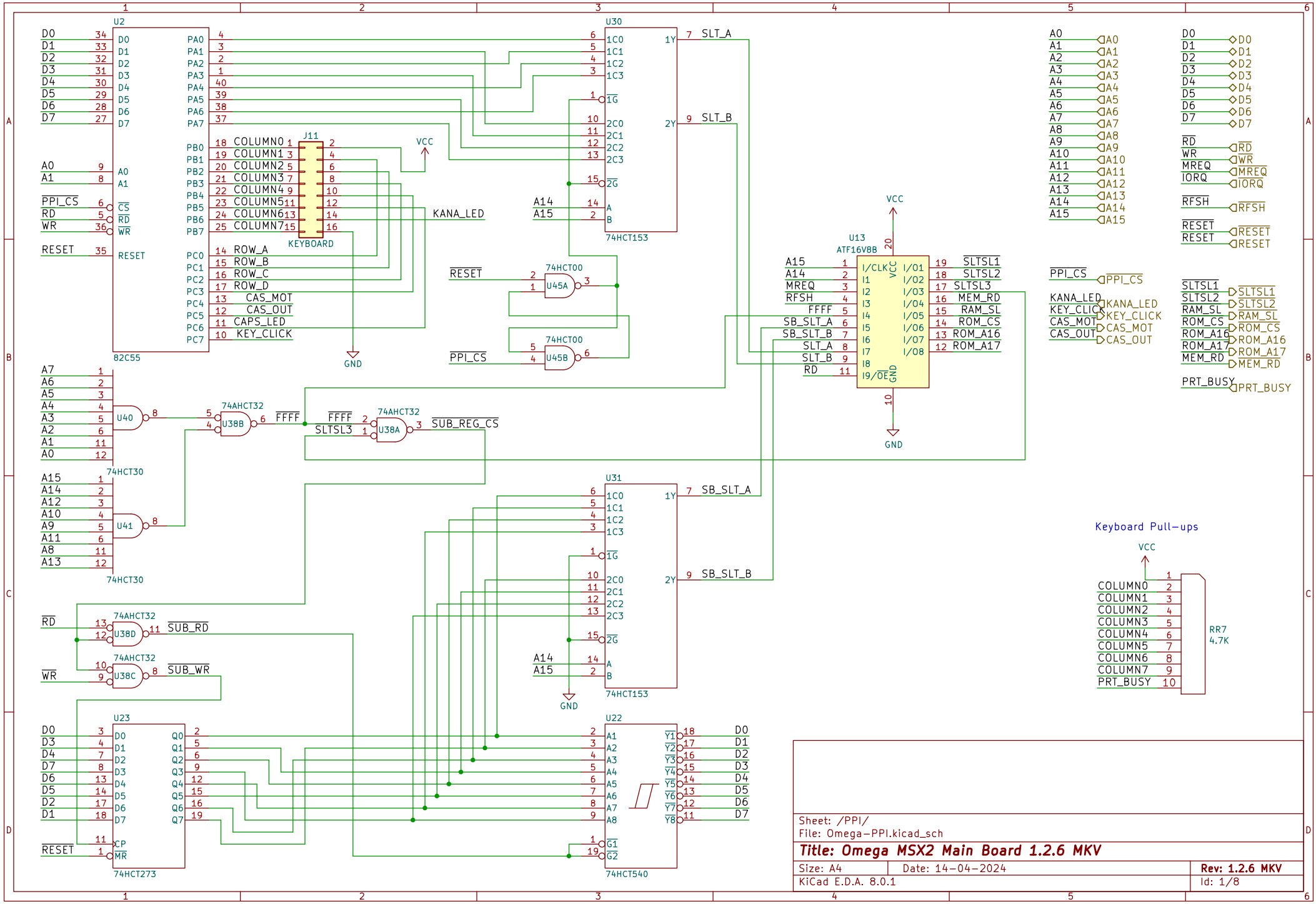
U2
82C55
U30
74HCT153
U13
ATF16V8B
J11
KEYBOARD
74HCT00
U45A
U45B
74AHCT32
U38B
U38A
U38D
U38C
74HCT30
U40
U41
U31
74HCT153
U23
74HCT273
U22
74HCT540
Keyboard Pull-ups
RR7
4.7K
VCC
GND
KANA_LED
SLT_A
SLT_B
SB_SLT_A
SB_SLT_B
SUB_REG_CS
SUB_RD
SUB_WR
SLTSL1
SLTSL2
SLTSL3
MEM_RD
RAM_SL
ROM_CS
ROM_A16
ROM_A17
PRT_BUSY
PPI_CS
RESET
COLUMN0
COLUMN1
COLUMN2
COLUMN3
COLUMN4
COLUMN5
COLUMN6
COLUMN7
ROW_A
ROW_B
ROW_C
ROW_D
CAS_MOT
CAS_OUT
CAPS_LED
KEY_CLICK
Sheet: /PPI/
File: Omega-PPI.kicad_sch
Title: Omega MSX2 Main Board 1.2.6 MKV
Size: A4
Date: 14-04-2024
Rev: 1.2.6 MKV
KiCad E.D.A. 8.0.1
Id: 1/8

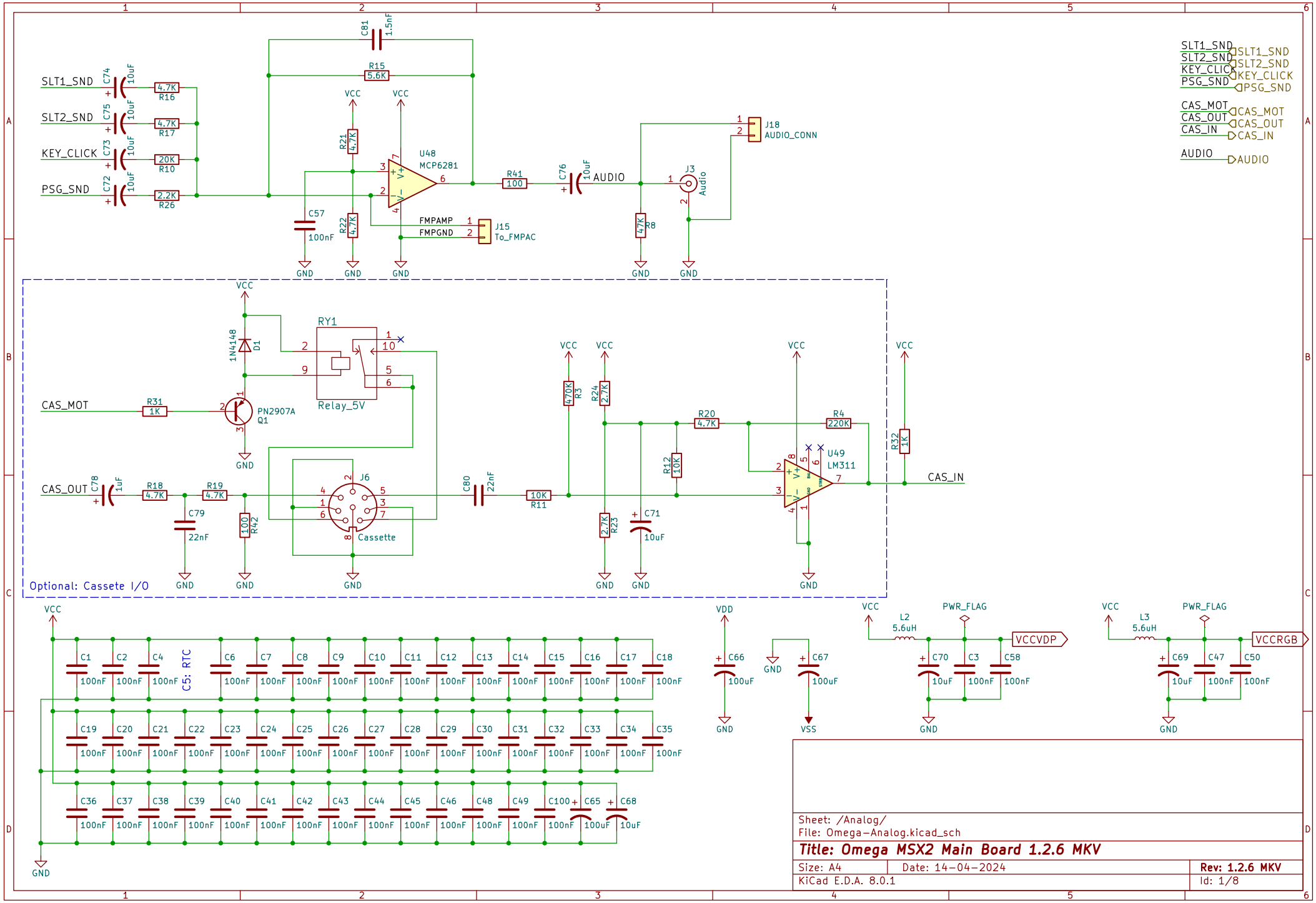

Sheet: /Analog/
File: Omega-Analog.kicad_sch

Title: Omega MSX2 Main Board 1.2.6 MKV

Size: A4	Date: 14-04-2024	Rev: 1.2.6 MKV
KiCad E.D.A. 8.0.1		Id: 1/8

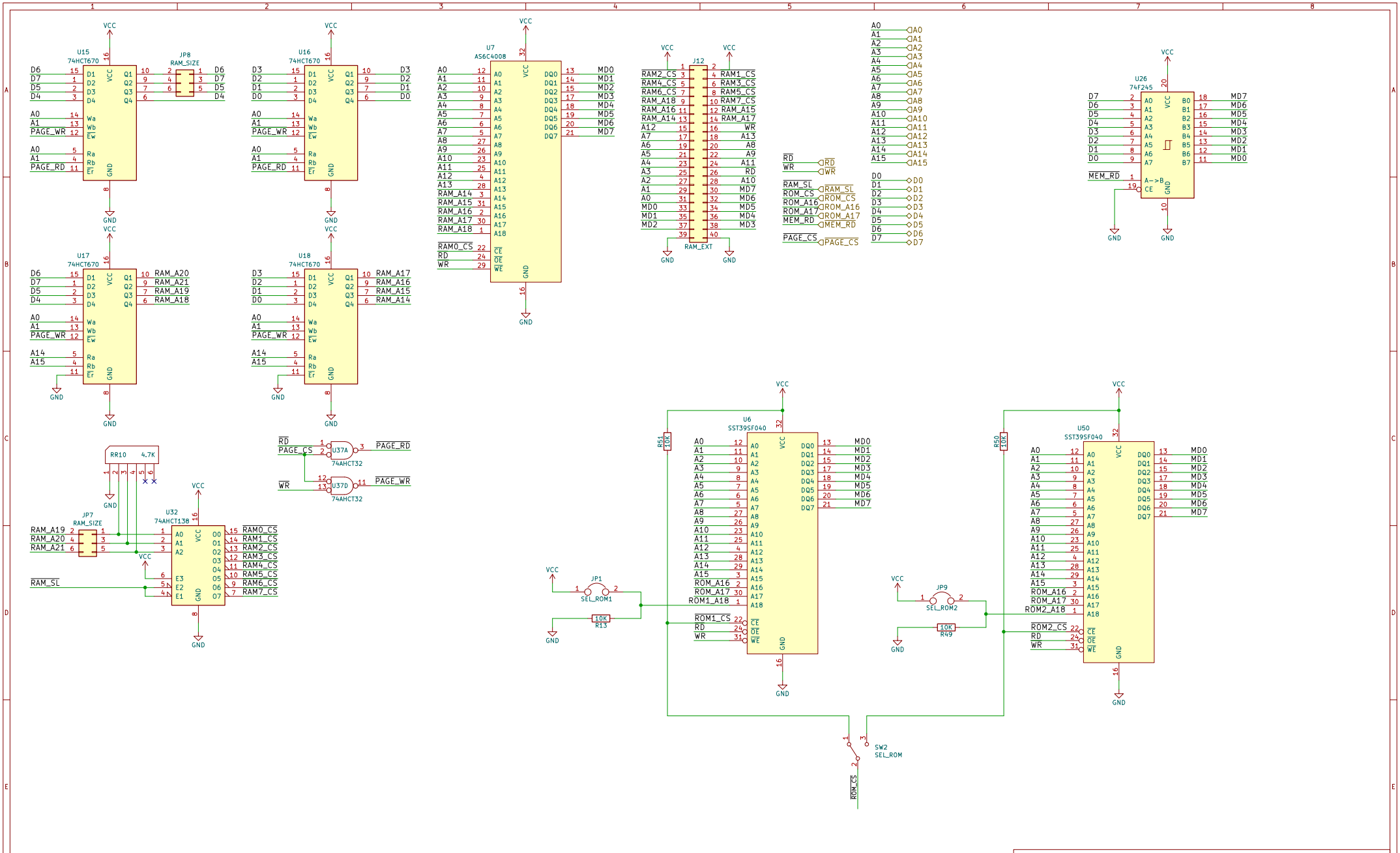

Sheet: /Memory/
File: Omega-Memory.kicad_sch

Title: Omega MSX2 Main Board 1.2.6 MKV

Size: A3	Date: 14-04-2024	Rev: 1.2.6 MKV
KiCad E.D.A. 8.0.1		Id: 1/8

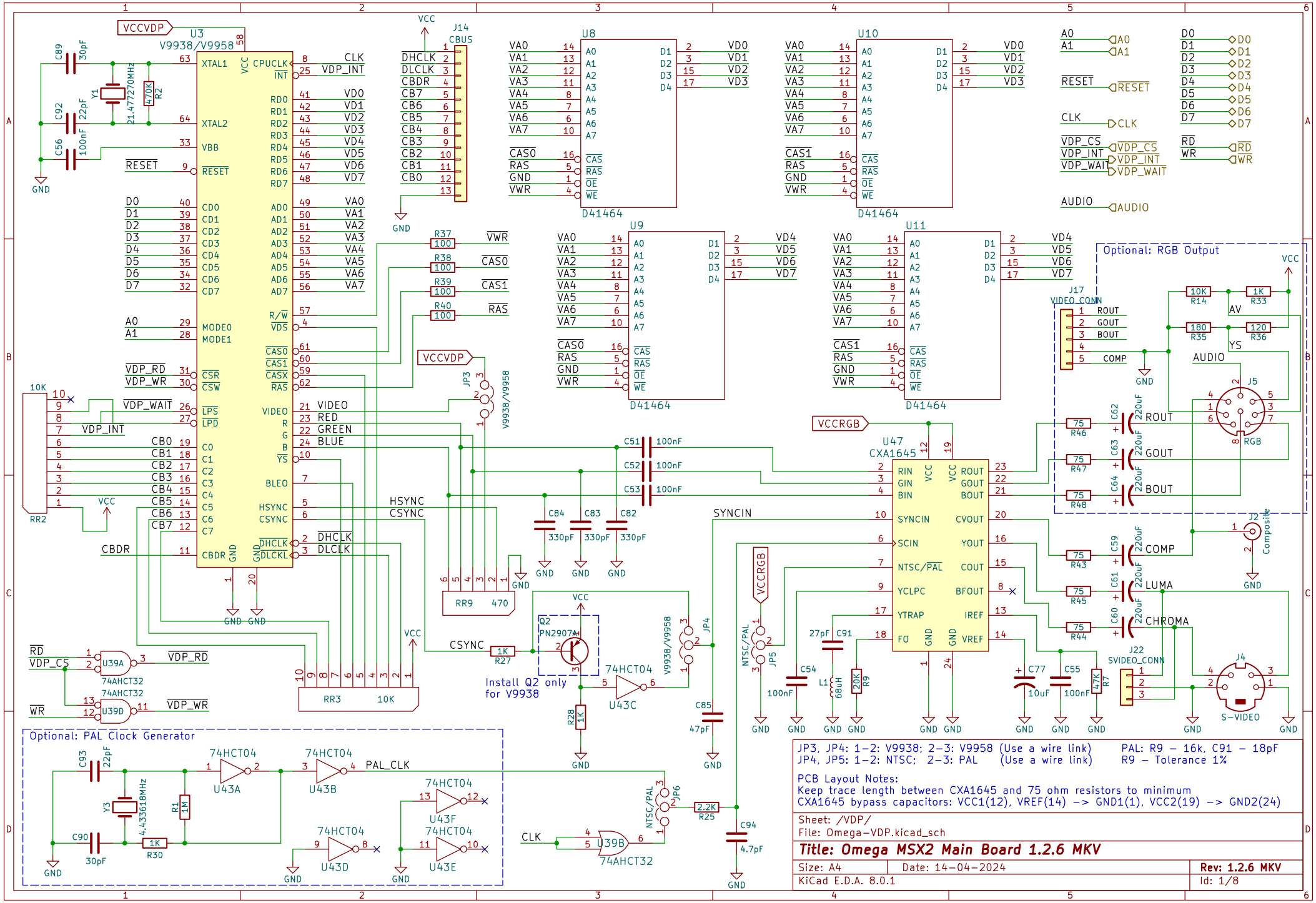
U3
V9938/V9958
U8
D41464
U10
D41464
U9
D41464
U11
D41464
U47
CXA1645
J14
CBUS
J17
VIDEO_CONN
J5
RGB
J2
Composite
J22
SVIDEO_CONN
J4
S-VIDEO
Optional: RGB Output
Optional: PAL Clock Generator
Install Q2 only
for V9938
JP3, JP4: 1-2: V9938; 2-3: V9958 (Use a wire link)
JP4, JP5: 1-2: NTSC; 2-3: PAL (Use a wire link)
PAL: R9 - 16k, C91 - 18pF
R9 - Tolerance 1%
PCB Layout Notes:
Keep trace length between CXA1645 and 75 ohm resistors to minimum
CXA1645 bypass capacitors: VCC1(12), VREF(14) -> GND1(1), VCC2(19) -> GND2(24)
Sheet: /VDP/
File: Omega-VDP.kicad_sch
Title: Omega MSX2 Main Board 1.2.6 MKV
Size: A4
Date: 14-04-2024
Rev: 1.2.6 MKV
KiCad E.D.A. 8.0.1
Id: 1/8

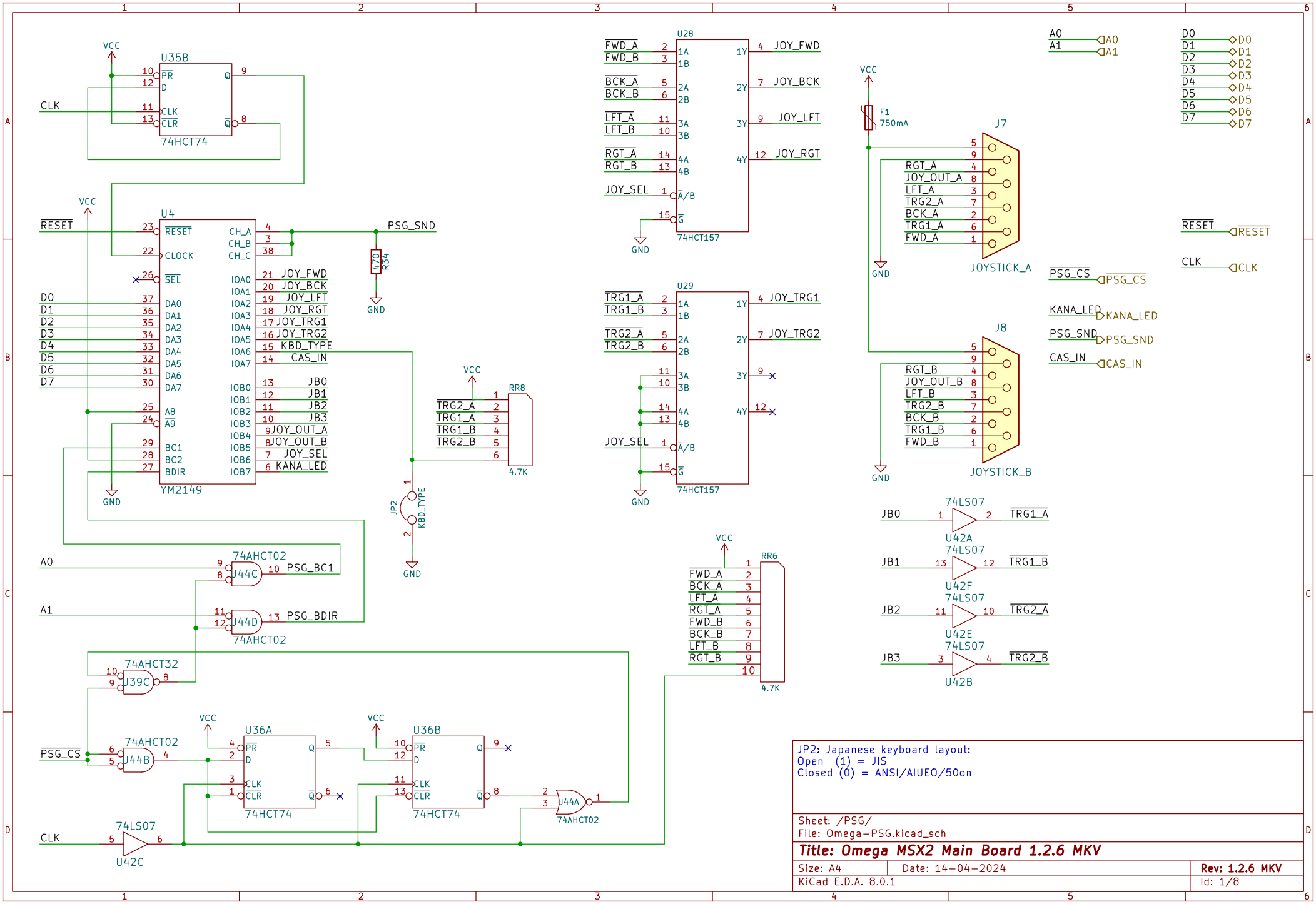

JP2: Japanese keyboard layout:
Open (1) = JIS
Closed (0) = ANSI/AIUEO/50on

Sheet: /PSG/
File: Omega-PSG.kicad_sch

Title: Omega MSX2 Main Board 1.2.6 MKV

Size: A4	Date: 14-04-2024	Rev: 1.2.6 MKV
KiCad E.D.A. 8.0.1		Id: 1/8