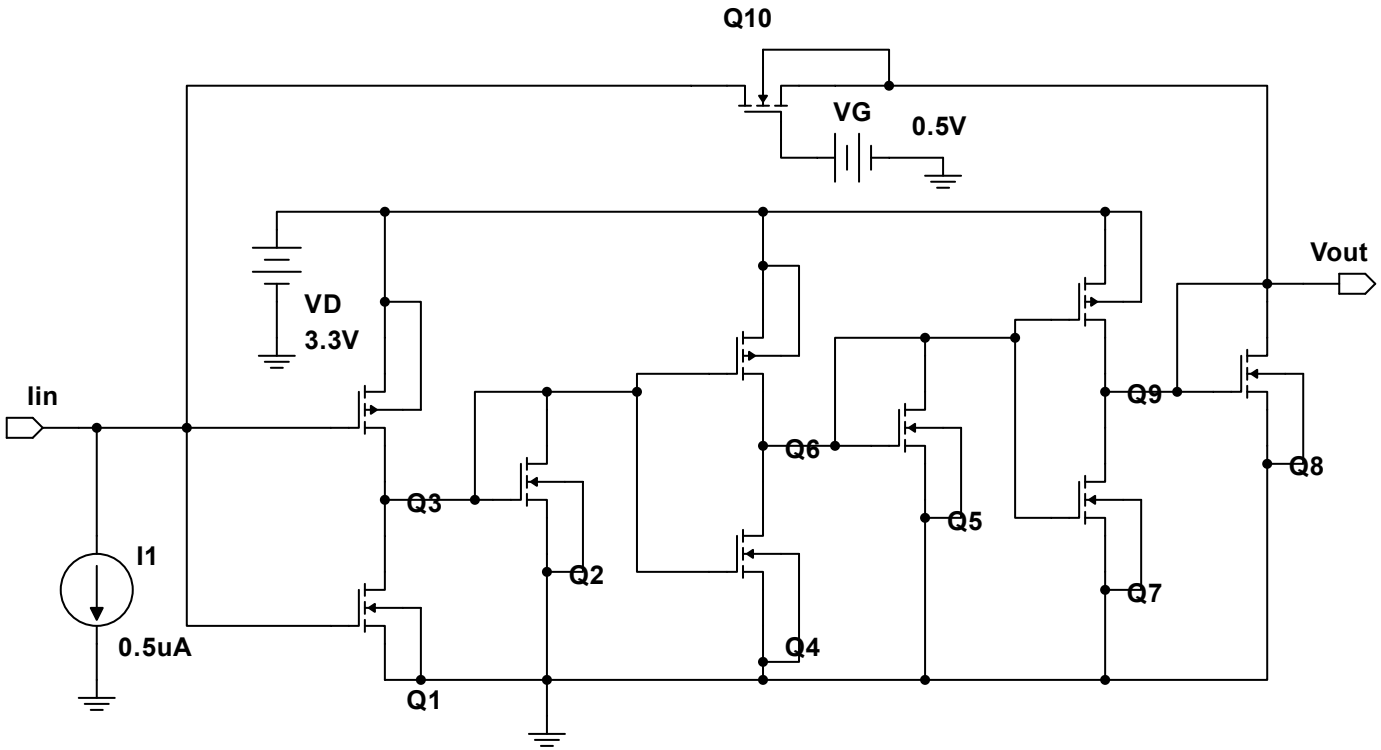

Title: THREE STAGE TRANSIMPEDANCE AMPLIFIER		
Three Stage TIA (Cascaded 3 Single Stage TIA)		
Designed by: LALIT ARORA	Document N: 02	Revision:
Checked by:	Date: 10-12-2016	Size: A
Approved by:	Sheet 2 of 2	