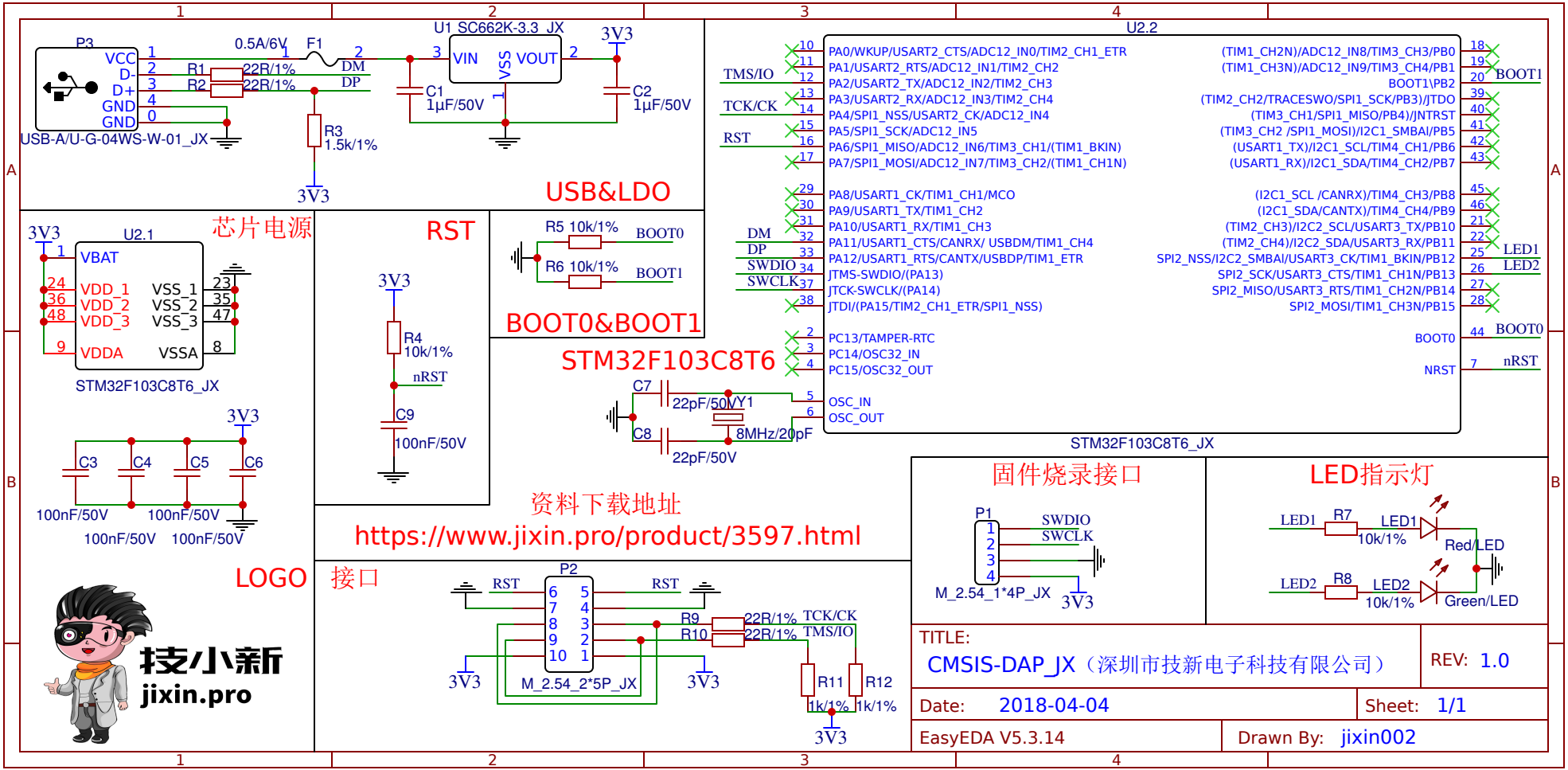
USB&LDO
P3
VCC
D-
D+
GND
GND
USB-A/U-G-04WS-W-01_JX
R1 22R/1%
R2 22R/1%
0.5A/6V
F1
DM
DP
R3 1.5k/1%
U1 SC662K-3.3_JX
VIN
VSS
VOUT
C1 1μF/50V
C2 1μF/50V
3V3
芯片电源
U2.1
VBAT
VDD_1
VDD_2
VDD_3
VDDA
VSS_1
VSS_2
VSS_3
VSSA
STM32F103C8T6_JX
C3
C4
C5
C6
100nF/50V
RST
R4 10k/1%
nRST
C9 100nF/50V
BOOT0&BOOT1
R5 10k/1%
R6 10k/1%
BOOT0
BOOT1
STM32F103C8T6
U2.2
PA0/WKUP/USART2_CTS/ADC12_IN0/TIM2_CH1_ETR
PA1/USART2_RTS/ADC12_IN1/TIM2_CH2
PA2/USART2_TX/ADC12_IN2/TIM2_CH3
PA3/USART2_RX/ADC12_IN3/TIM2_CH4
PA4/SPI1_NSS/USART2_CK/ADC12_IN4
PA5/SPI1_SCK/ADC12_IN5
PA6/SPI1_MISO/ADC12_IN6/TIM3_CH1/(TIM1_BKIN)
PA7/SPI1_MOSI/ADC12_IN7/TIM3_CH2/(TIM1_CH1N)
PA8/USART1_CK/TIM1_CH1/MCO
PA9/USART1_TX/TIM1_CH2
PA10/USART1_RX/TIM1_CH3
PA11/USART1_CTS/CANRX/ USBDM/TIM1_CH4
PA12/USART1_RTS/CANTX/USBDP/TIM1_ETR
JTMS-SWDIO/(PA13)
JTCK-SWCLK/(PA14)
JTDI/(PA15/TIM2_CH1_ETR/SPI1_NSS)
PC13/TAMPER-RTC
PC14/OSC32_IN
PC15/OSC32_OUT
OSC_IN
OSC_OUT
(TIM1_CH2N)/ADC12_IN8/TIM3_CH3/PB0
(TIM1_CH3N)/ADC12_IN9/TIM3_CH4/PB1
BOOT1\PB2
(TIM2_CH2/TRACESWO/SPI1_SCK/PB3)/JTDO
(TIM3_CH1/SPI1_MISO/PB4)/JNTRST
(TIM3_CH2 /SPI1_MOSI)/I2C1_SMBAI/PB5
(USART1_TX)/I2C1_SCL/TIM4_CH1/PB6
(USART1_RX)/I2C1_SDA/TIM4_CH2/PB7
(I2C1_SCL /CANRX)/TIM4_CH3/PB8
(I2C1_SDA/CANTX)/TIM4_CH4/PB9
(TIM2_CH3)/I2C2_SCL/USART3_TX/PB10
(TIM2_CH4)/I2C2_SDA/USART3_RX/PB11
SPI2_NSS/I2C2_SMBAI/USART3_CK/TIM1_BKIN/PB12
SPI2_SCK/USART3_CTS/TIM1_CH1N/PB13
SPI2_MISO/USART3_RTS/TIM1_CH2N/PB14
SPI2_MOSI/TIM1_CH3N/PB15
BOOT0
NRST
TMS/IO
TCK/CK
RST
DM
DP
SWDIO
SWCLK
BOOT1
LED1
LED2
BOOT0
nRST
C7 22pF/50V
C8 22pF/50V
Y1 8MHz/20pF
资料下载地址
https://www.jixin.pro/product/3597.html
固件烧录接口
P1
SWDIO
SWCLK
M_2.54_1*4P_JX
LED指示灯
LED1
R7 10k/1%
Red/LED
LED2
R8 10k/1%
Green/LED
LOGO
技小新
jixin.pro
接口
P2
RST
M_2.54_2*5P_JX
R9 22R/1%
R10 22R/1%
TCK/CK
TMS/IO
R11 1k/1%
R12 1k/1%
TITLE:
CMSIS-DAP_JX（深圳市技新电子科技有限公司）
REV: 1.0
Date: 2018-04-04
Sheet: 1/1
EasyEDA V5.3.14
Drawn By: jixin002