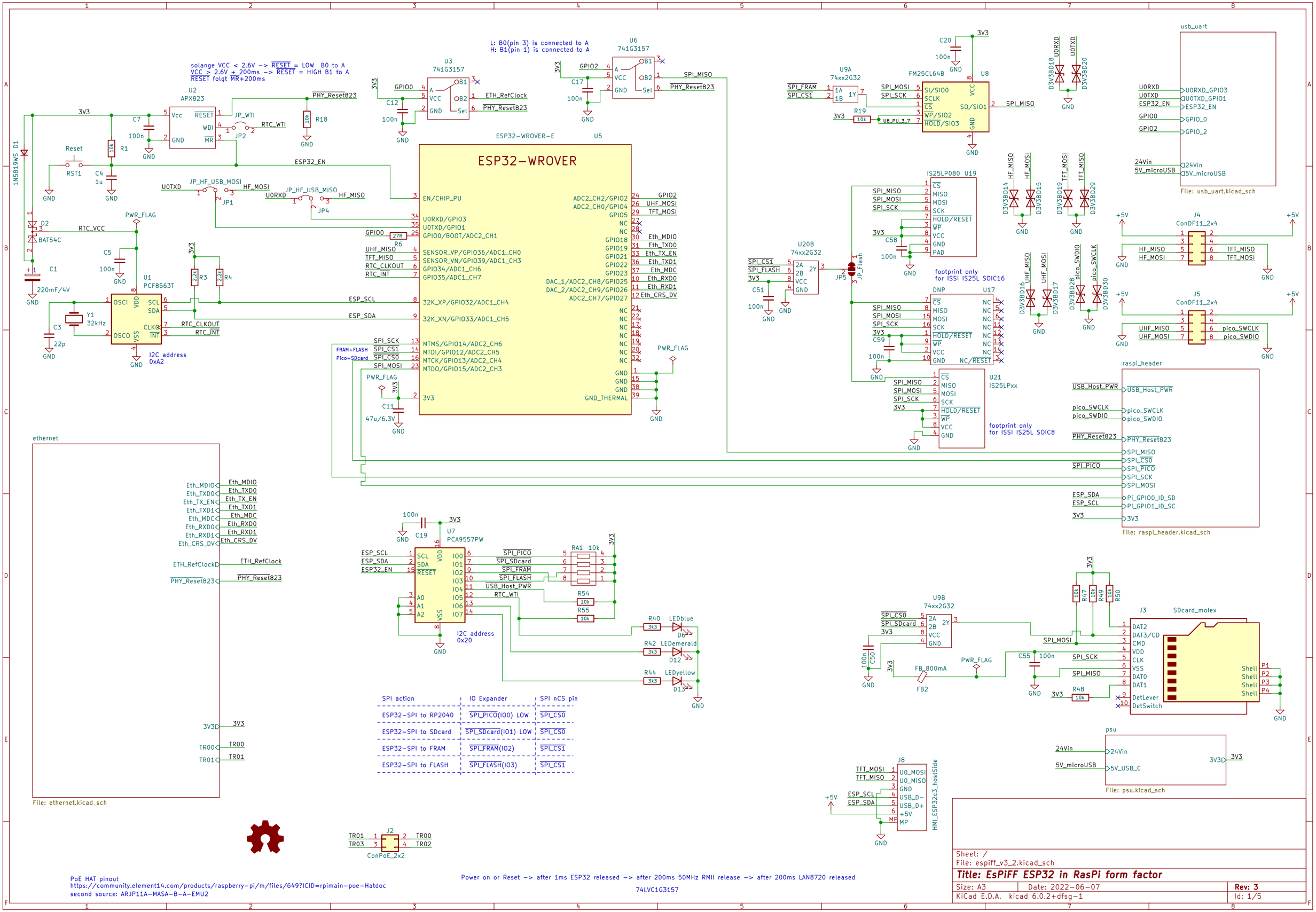

SPI action	IO Expander	SPI nCS pin
ESP32-SPI to RP2040	SPI_PICO(IO0) LOW	SPI_CS0
ESP32-SPI to SDcard	SPI_SDcard(IO1) LOW	SPI_CS0
ESP32-SPI to FRAM	SPI_FRAM(IO2)	SPI_CS1
ESP32-SPI to FLASH	SPI_FLASH(IO3)	SPI_CS1

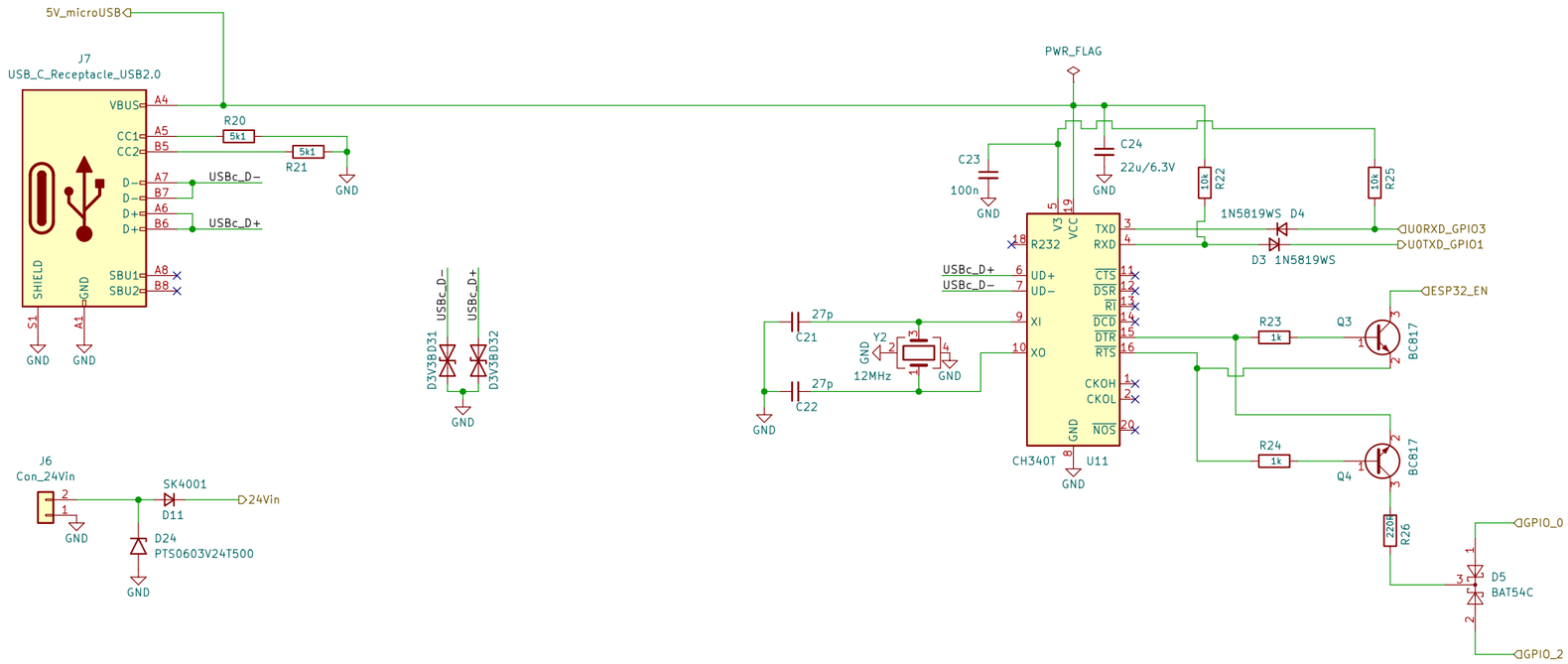

Sheet: /usb_uart/
File: usb_uart.kicad_sch

Title: USB to UART bridge

Size: A3	Date: 2022-06-07	Rev: 3
KiCad E.D.A. kicad 6.0.2+dfsg-1		Id: 2/5

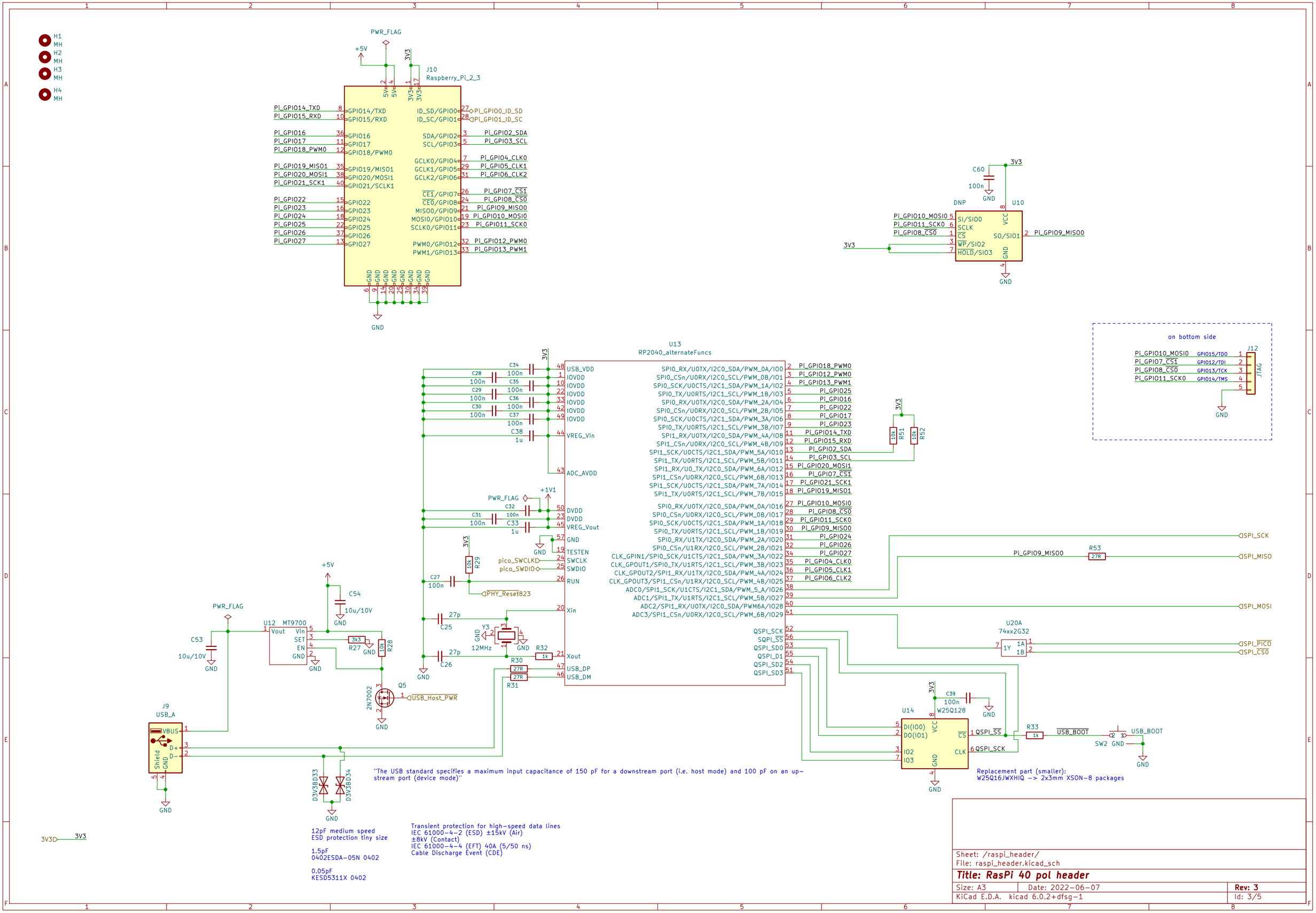
H1 MH
H2 MH
H3 MH
H4 MH
PWR_FLAG
+5V
3V3
J10
Raspberry_Pi_2_3
Pi_GPIO14_TXD
Pi_GPIO15_RXD
Pi_GPIO16
Pi_GPIO17
Pi_GPIO18_PWM0
Pi_GPIO19_MISO1
Pi_GPIO20_MOSI1
Pi_GPIO21_SCK1
Pi_GPIO22
Pi_GPIO23
Pi_GPIO24
Pi_GPIO25
Pi_GPIO26
Pi_GPIO27
Pi_GPIO00_ID_SD
Pi_GPIO01_ID_SC
Pi_GPIO02_SDA
Pi_GPIO03_SCL
Pi_GPIO04_CLK0
Pi_GPIO05_CLK1
Pi_GPIO06_CLK2
Pi_GPIO7_CS1
Pi_GPIO8_CS0
Pi_GPIO9_MISO0
Pi_GPIO10_MOSI0
Pi_GPIO11_SCK0
Pi_GPIO12_PWM0
Pi_GPIO13_PWM1
GND
C60
100n
DNP
U10
Pi_GPIO10_MOSI0
Pi_GPIO11_SCK0
Pi_GPIO8_CS0
SI/SIO0
SCLK
CS
WP/SIO2
HOLD/SIO3
VCC
SO/SIO1
GND
Pi_GPIO9_MISO0
U13
RP2040_alternateFuncs
USB_VDD
IOVDD
VREG_Vin
ADC_AVDD
DVDD
VREG_Vout
TESTEN
SWCLK
SWDIO
RUN
Xin
Xout
USB_DP
USB_DM
pico_SWCLK
pico_SWDIO
PHY_Reset823
Y3
12MHz
R32
R30
R31
R29
R51
R52
R53
SPI_SCK
SPI_MISO
SPI_MOSI
SPI_PICO
SPI_CS0
QSPI_SCK
QSPI_SS
QSPI_SD0
QSPI_D1
QSPI_SD2
QSPI_SD3
U20A
74xx2G32
U14
W25Q128
C39
R33
USB_BOOT
SW2
on bottom side
J12
JTAG
GPIO15/TDO
GPIO12/TDI
GPIO13/TCK
GPIO14/TMS
C53
10u/10V
U12
MT9700
Vout
Vin
SET
EN
C54
R27
R28
Q5
2N7002
USB_Host_PWR
J9
USB_A
VBUS
D+
D-
Shield
D3V3BD33
D3V3BD34
"The USB standard specifies a maximum input capacitance of 150 pF for a downstream port (i.e. host mode) and 100 pF on an up-stream port (device mode)"
Replacement part (smaller):
W25Q16JWXHIQ -> 2x3mm XSON-8 packages
12pF medium speed
ESD protection tiny size
1.5pF
0402ESDA-05N 0402
0.05pF
KESD5311X 0402
Transient protection for high-speed data lines
IEC 61000-4-2 (ESD) ±15kV (Air)
±8kV (Contact)
IEC 61000-4-4 (EFT) 40A (5/50 ns)
Cable Discharge Event (CDE)
Sheet: /raspi_header/
File: raspi_header.kicad_sch
Title: RasPi 40 pol header
Size: A3
Date: 2022-06-07
Rev: 3
KiCad E.D.A. kicad 6.0.2+dfsg-1
Id: 3/5

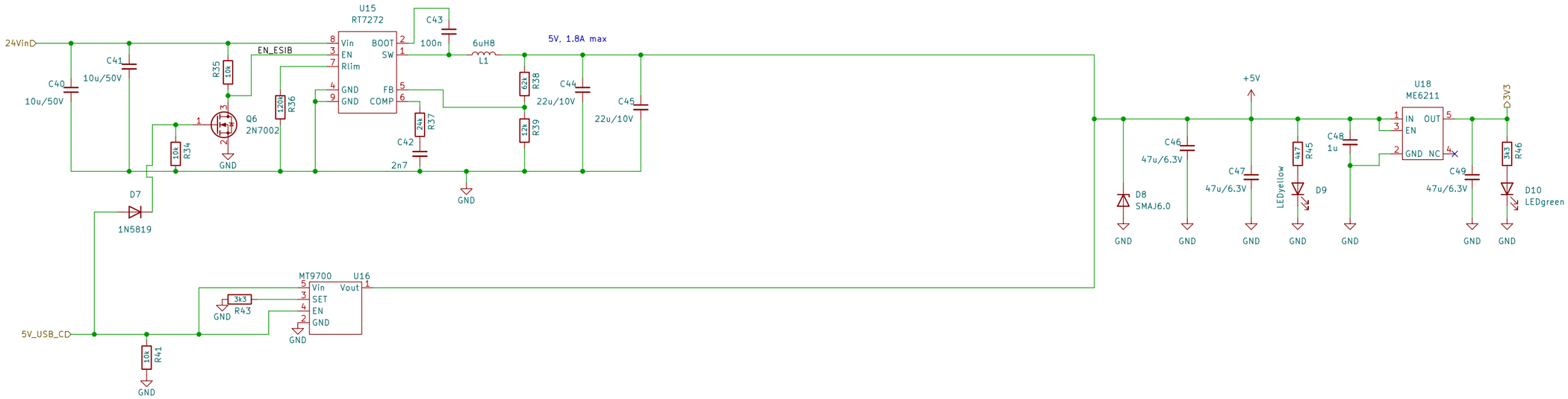

Sheet: /psu/
File: psu.kicad_sch

Title: Power supply

Size: A3	Date: 2022-06-08	Rev: 3
KiCad E.D.A. kicad 6.0.2+dfsg-1		Id: 4/5

SEMTECH-TCLAMP3302N
particular made for Ehternet ESD
12pF pin-pin
25pF pin-GND

0.5pF ESD diodes:
UDD32C03L01 SOD-323
KPESD3V3S1BL DFN1006

0.05pF ESP diode
KPESDC2FD3V3B 0402

Transient protection for high-speed data lines
IEC 61000-4-2 (ESD) ±15kV (Air)
±8kV (Contact)
IEC 61000-4-4 (EFT) 40A (5/50 ns)
Cable Discharge Event (CDE)

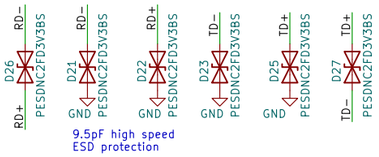

9.5pF high speed
ESD protection

Espressif Ethernet dev board
ESD protection
SLVU2.8-4 -> 5pF

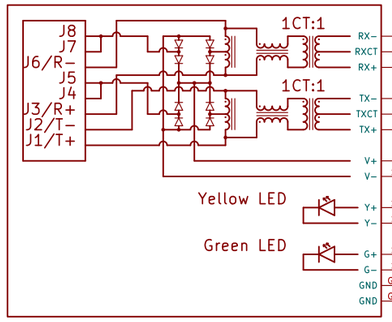

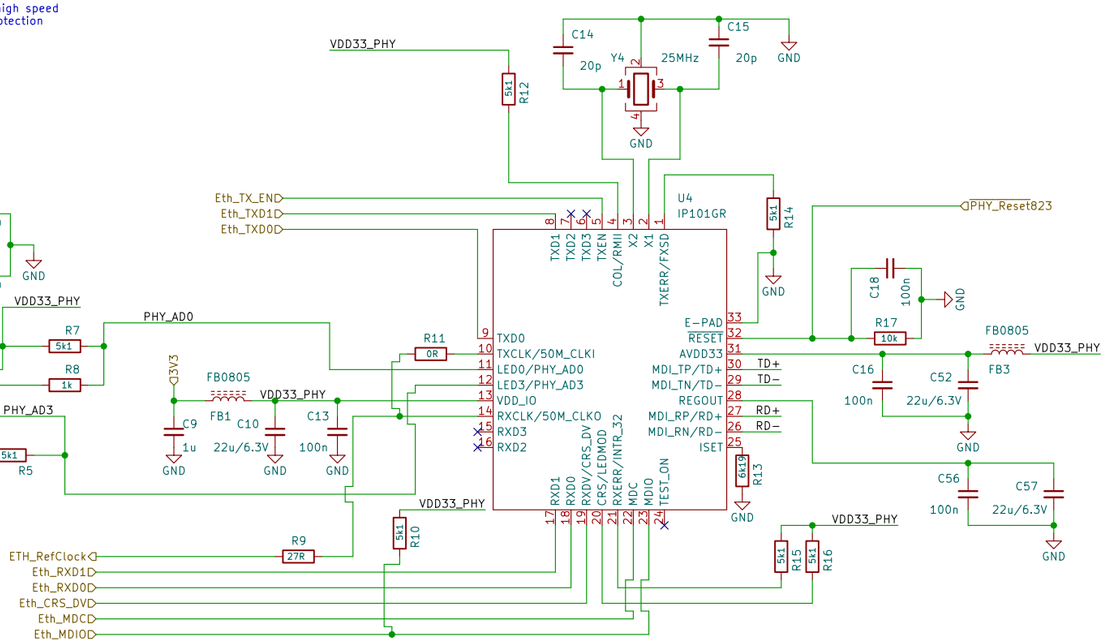

Espressif: PHY_AD0 -> 1k -> (C) red LED (A) - 3.3V
|----------5k1----------|

MDC: PHY_AD0 -> 1k -> (C) yellow LED (A) - 3.3V
|----------5k1----------|

Espressif:PHY_AD3 -> (A) green LED (C) -> 1k -> GND
|---------- 5k1 ----------|

MDC: PHY_AD3 -> (A) LED green (C) -> 1k -> GND
|---------- 5k1 ----------|

MDC

Sheet: /ethernet/
File: ethernet.kicad_sch

Title: Ethernet PHY IP101

Size: A3	Date: 2022-08-14	Rev: 3a
KiCad E.D.A. kicad 6.0.2+dfsg-1		Id: 5/5