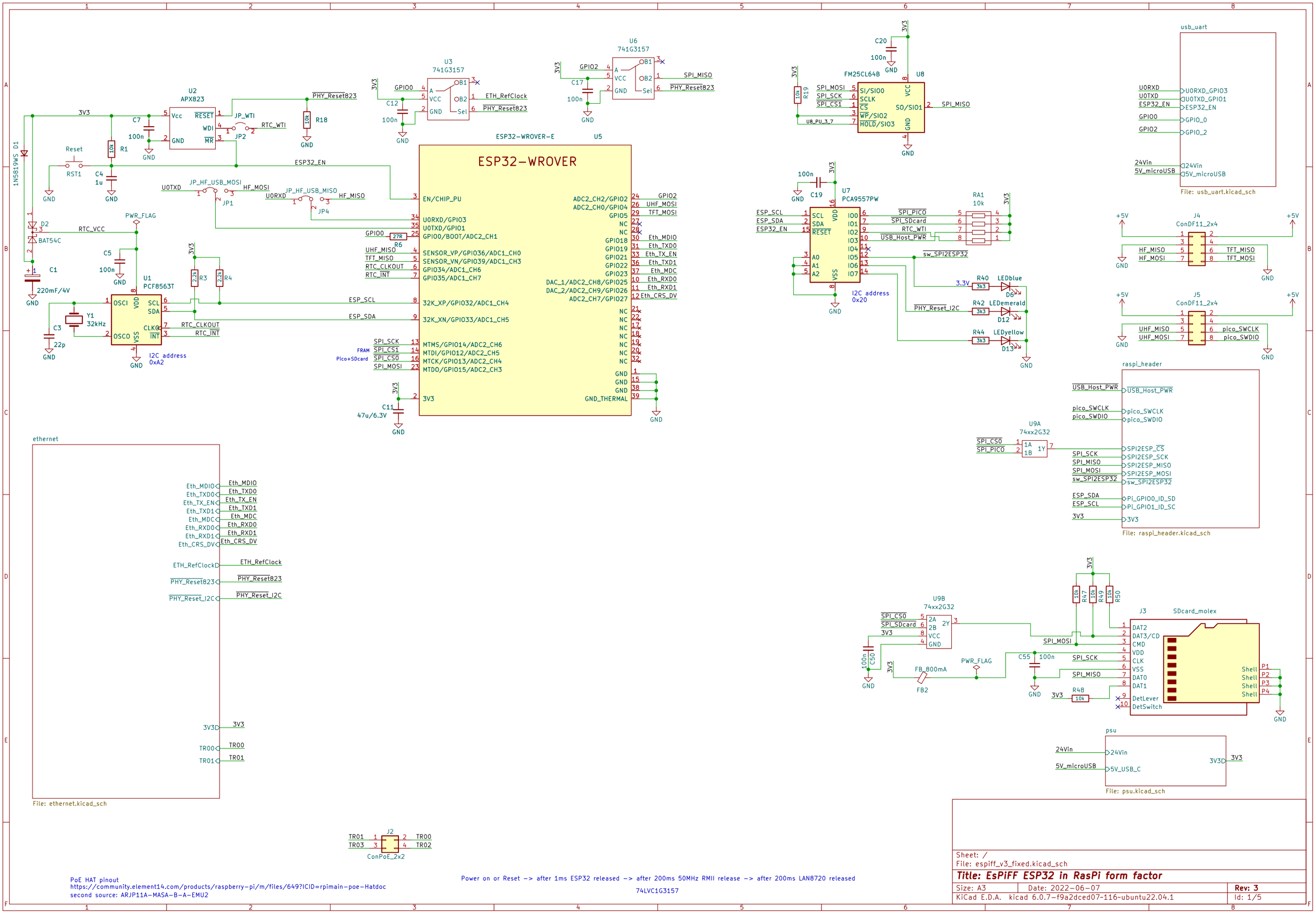
ESP32-WROVER
ESP32-WROVER-E
U5
U1
PCF8563T
I2C address
0xA2
U2
APX823
U3
741G3157
U6
741G3157
U7
PCA9557PW
I2C address
0x20
U8
FM25CL64B
usb_uart
File: usb_uart.kicad_sch
J4
ConDF11_2x4
J5
ConDF11_2x4
raspi_header
File: raspi_header.kicad_sch
U9A
74xx2G32
U9B
74xx2G32
J3
SDcard_molex
FB_800mA
FB2
psu
File: psu.kicad_sch
ethernet
File: ethernet.kicad_sch
J2
ConPoE_2x2
PoE HAT pinout
https://community.element14.com/products/raspberry-pi/m/files/649?ICID=rpimain-poe-Hatdoc
second source: ARJP11A-MASA-B-A-EMU2
Power on or Reset -> after 1ms ESP32 released -> after 200ms 50MHz RMII release -> after 200ms LAN8720 released
74LVC1G3157
Sheet: /
File: espiff_v3_fixed.kicad_sch
Title: EsPiFF ESP32 in RasPi form factor
Size: A3
Date: 2022-06-07
Rev: 3
KiCad E.D.A. kicad 6.0.7-f9a2dced07-116-ubuntu22.04.1
Id: 1/5

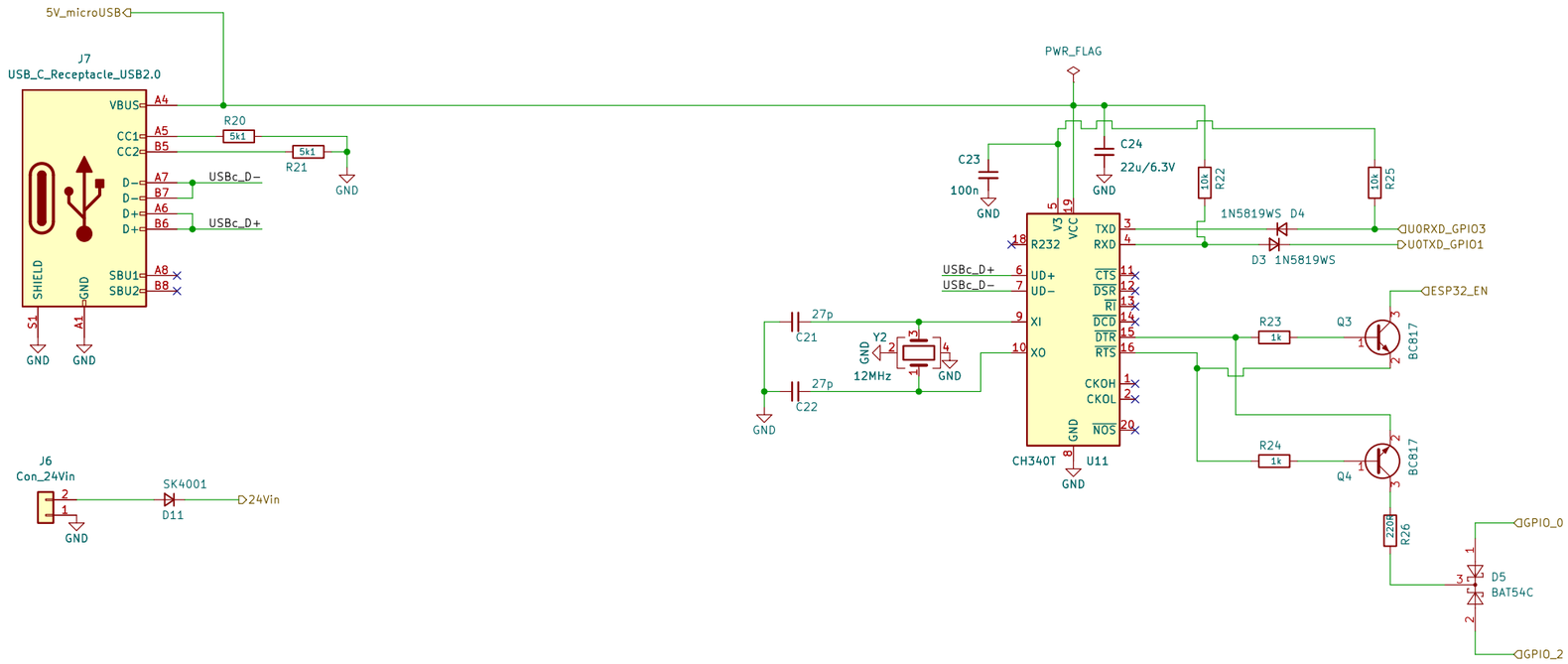

Sheet: /usb_uart/
File: usb_uart.kicad_sch

Title: USB to UART bridge

Size: A3	Date: 2022-06-07	Rev: 3
KiCad E.D.A. kicad 6.0.7-f9a2dced07~116~ubuntu22.04.1		Id: 2/5

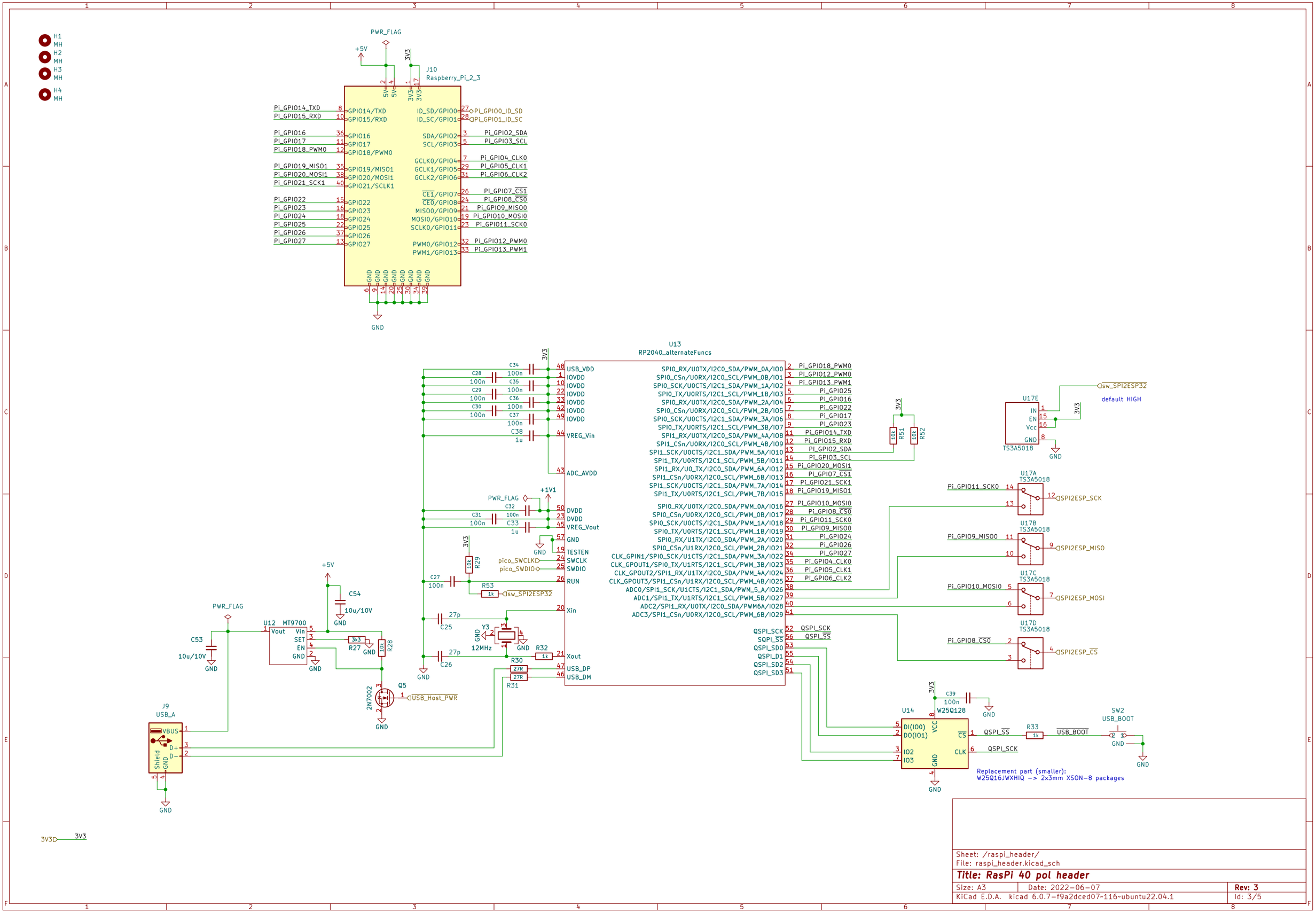

Sheet: /raspi_header/
File: raspi_header.kicad_sch

Title: RasPi 40 pol header

Size: A3	Date: 2022-06-07	Rev: 3
KiCad E.D.A. kicad 6.0.7-f9a2dced07~116~ubuntu22.04.1		Id: 3/5

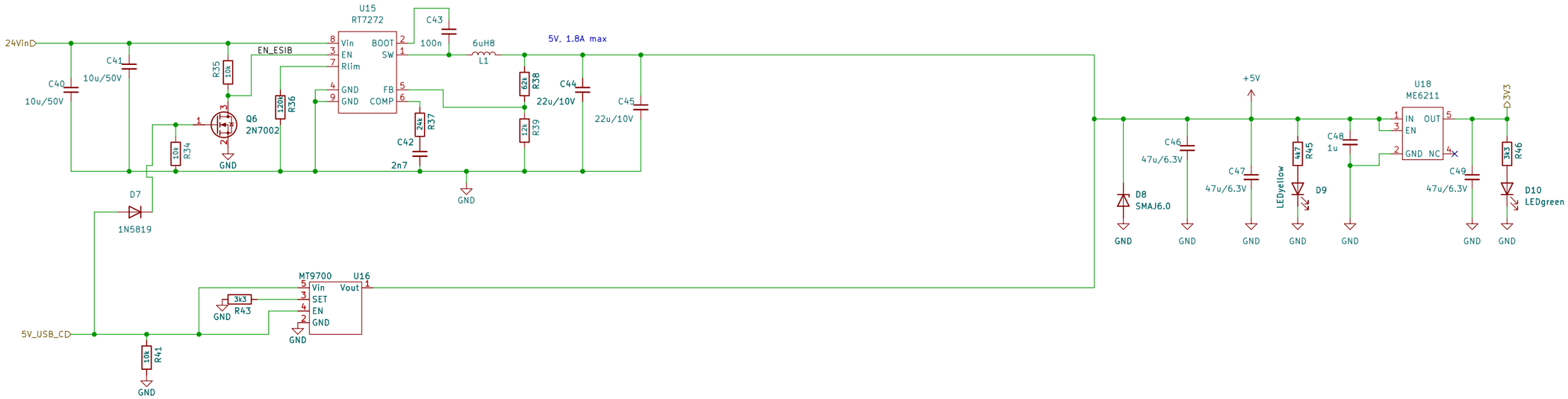

Sheet: /psu/
File: psu.kicad_sch

Title: Power supply

Size: A3	Date: 2022-06-08	Rev: 3
KiCad E.D.A. kicad 6.0.7-f9a2dced07~116~ubuntu22.04.1		Id: 4/5

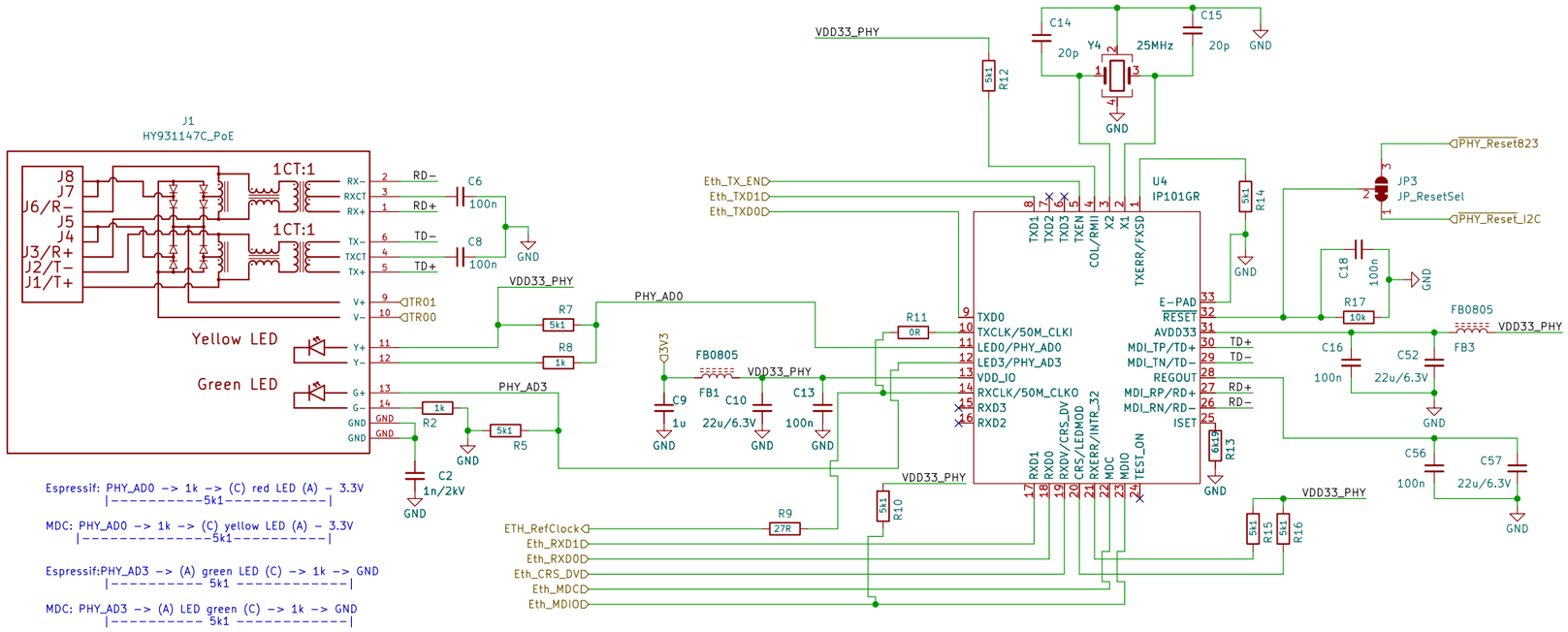

MDC

Sheet: /ethernet/
File: ethernet.kicad_sch

Title: Ethernet PHY IP101

Size: A3	Date: 2022-08-14	**Rev: 3a**
KiCad E.D.A. kicad 6.0.7-f9a2dced07~116~ubuntu22.04.1		Id: 5/5