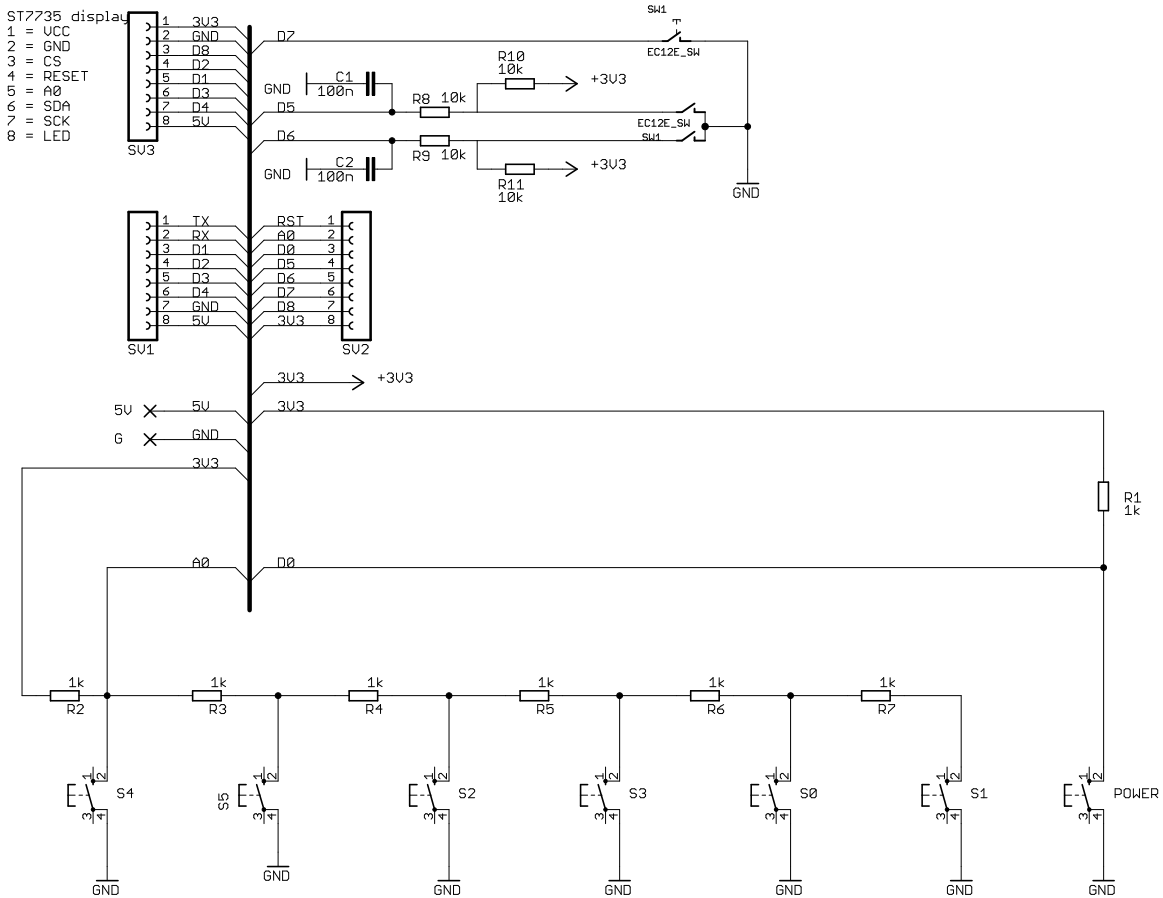

Remark :
* Version 2 function button assigment changed!!!

Wifi Manual Control
!Use at own risk!

TITLE: wmc

Document Number:

REV: 4

Date: 2-8-2018 19:25

Sheet: 1/1