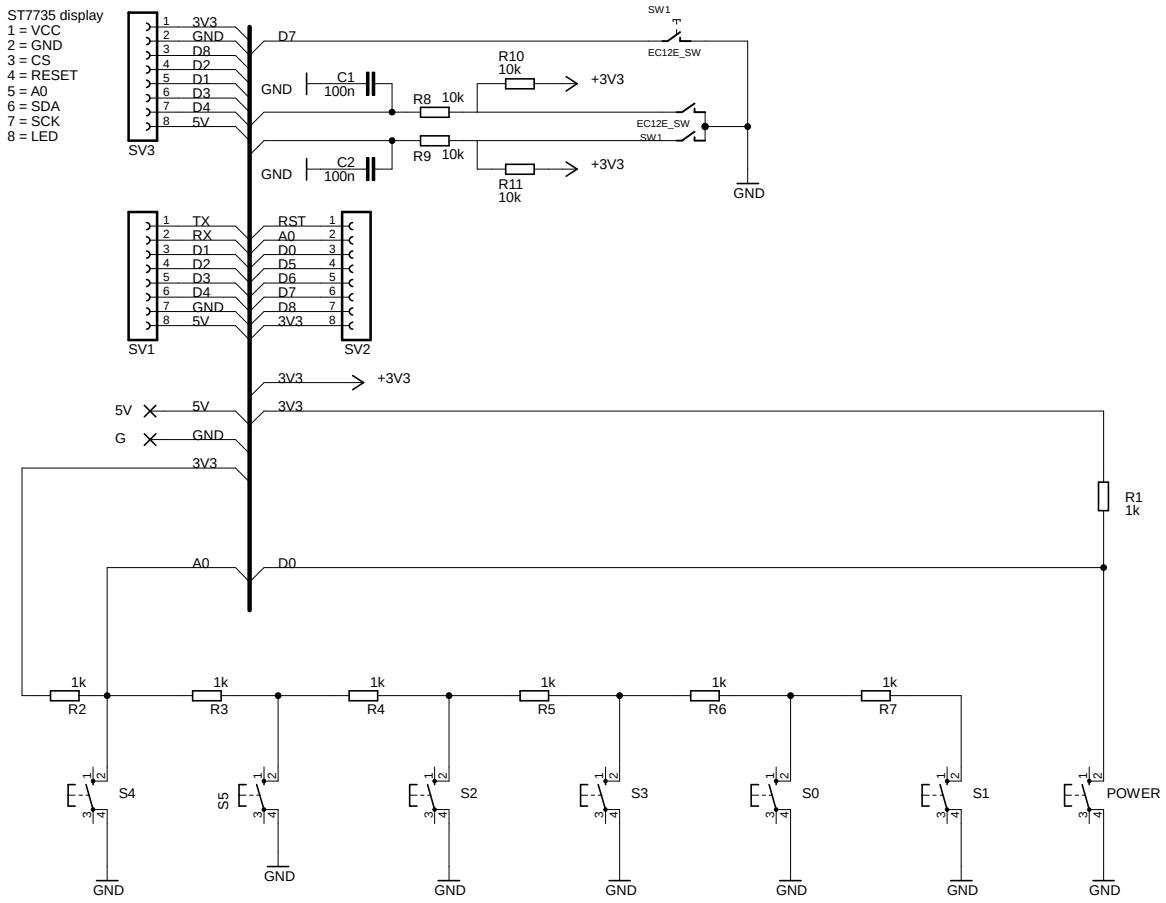

Remark :
* Version 2 function button assigment changed!!!

Wifi Manual Control
!Use at own risk!

TITLE: wmc

Document Number:

REV: 3

Date: 9-7-2018 19:41

Sheet: 1/1