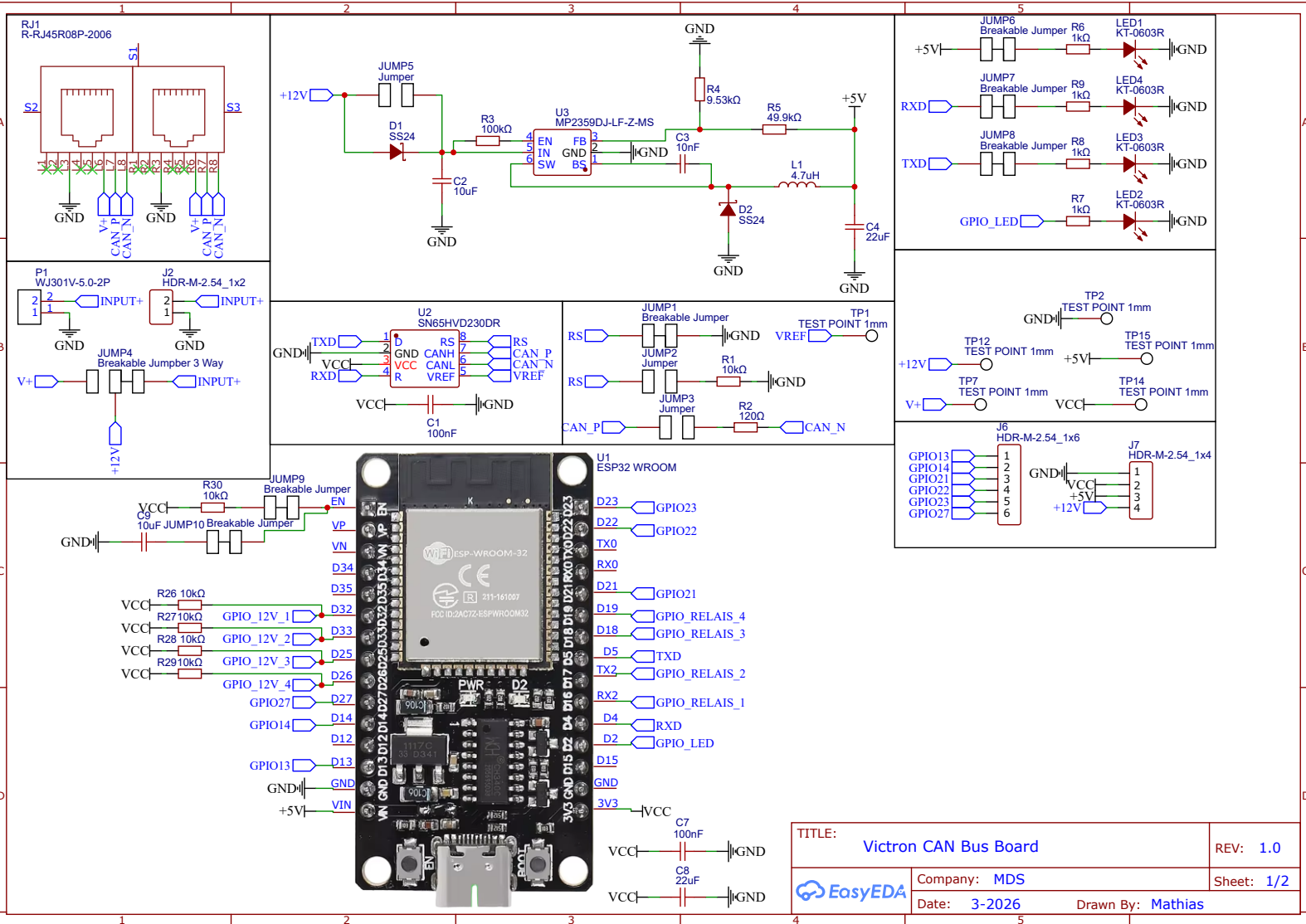

TITLE: Victron CAN Bus Board	REV: 1.0
EasyEDA Company: MDS	Sheet: 1/2
Date: 3-2026 Drawn By: Mathias	

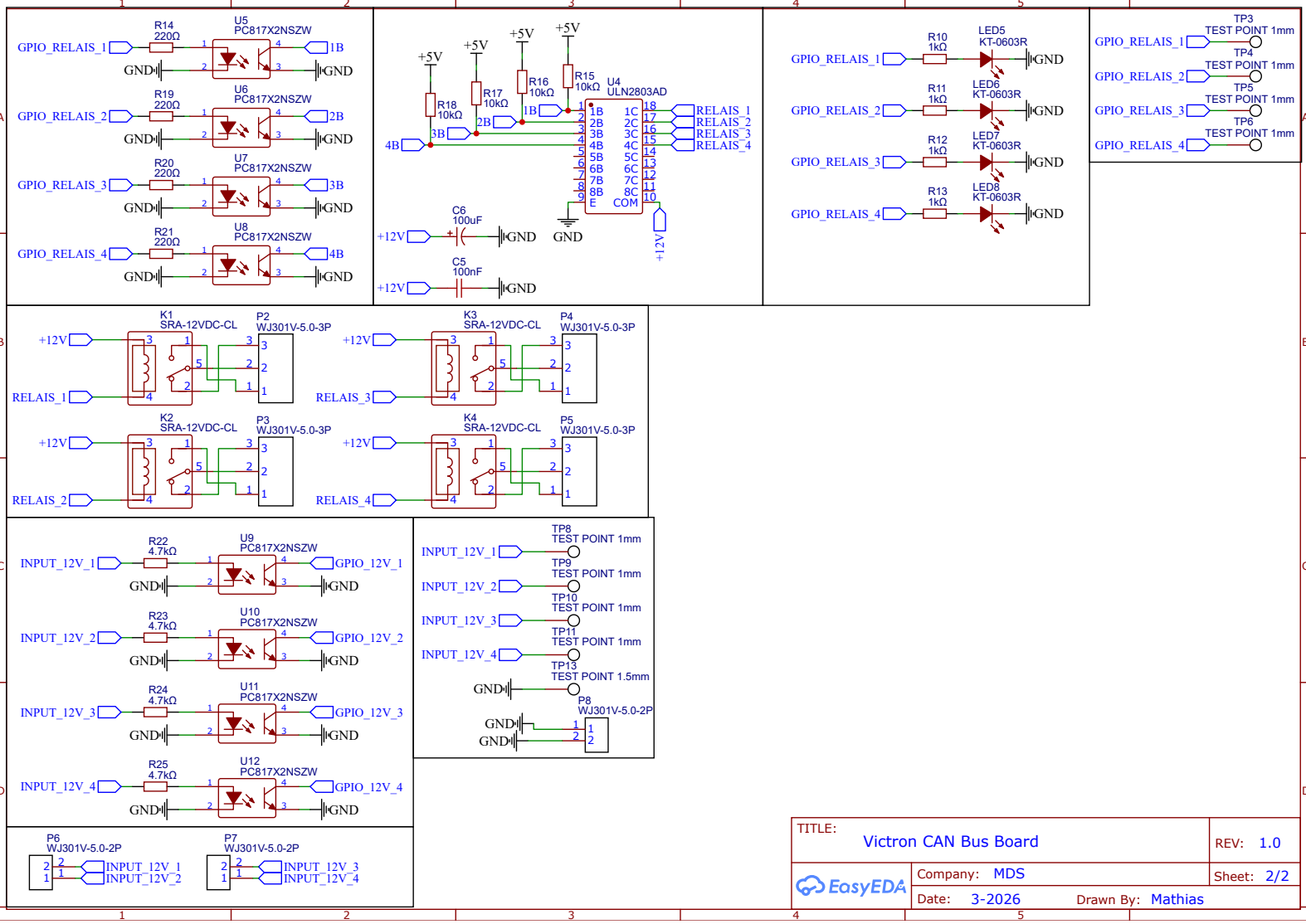

TITLE: Victron CAN Bus Board	REV: 1.0
EasyEDA Company: MDS	Sheet: 2/2
Date: 3-2026 Drawn By: Mathias	