U_B13
B13.SchDoc

U_B14
B14.SchDoc

U_B15
B15.SchDoc

U_B16
B16.SchDoc

U_B34
B34.SchDoc

U_FPGA-CFG
FPGA-CFG.SchDoc

U_FPGA-MGT
FPGA-MGT.SchDoc

U_FPGA-PWR
FPGA-PWR.SchDoc

U_PowerMain
PowerMain.SchDoc

U_POWER
POWER.SchDoc

U_HDMI
HDMI.SchDoc

U_VGA
VGA.SchDoc

U_Ethernet
Ethernet.SchDoc

U_SOUND
SOUND.SchDoc

U_KEYBOARD
KEYBOARD.SchDoc

U_Floppy
Floppy.SchDoc

U_JOY
JOY.SchDoc

U_EXT_HEADER
EXT_HEADER.SchDoc

U_EXP_Slot
EXP_Slot.SchDoc

U_LED_SW_BUT
LED_SW_BUT.SchDoc

PM1 FIDU-DOT - small
PM2 FIDU-DOT - small
PM3 FIDU-DOT - small
PM4 FIDU-DOT - small
PM5 FIDU-DOT - small
PM6 FIDU-DOT - small

Address 0x40 I/O Expander
Address 0x61 DC/DC Converter
Address 0x67 DC/DC Converter

KK1
ATS-CPX025025015-138-C2-R0
R234 0R
R235 0R
GND GND

Serial1
Serial
Serialnumber 6,3 x 6.3mm

LOGO1
TE Logo PRINT Layer
LOGO PRINT

CE
CE Logo on Top Overlay
CE-TOPOVERLAY

Shielding

DDR
SHIELD4
BMI-S-202-C
Shield1
GND
BMI-S-202-F

FPGA
SHIELD5
BMI-S-230-C
Shield2
GND
BMI-S-230-F-R

DCDC
SHIELD6
BMI-S-205-C
Shield3
GND
BMI-S-205-F

GND Mount.Hole 3.2mm
GND Mount.Hole 3.2mm
GND Mount.Hole 3.2mm
GND Mount.Hole 3.2mm
GND Mount.Hole 3.2mm
GND Mount.Hole 3.2mm

Design drawn by:	VY
Checked by:	IG
Assembly variant:	T001C
Created by:	VY
Modified by:	VY
Modified at:	2023-07-14

trenz electronic

Title:	MEGA65	This design is licensed under CERN-OHL-P v2.0 License https://cern-ohl.web.cern.ch/home
A4	Number: TE0765 T001C	Rev. 06
Date: 2023-12-14	Copyright: Trenz Electronic GmbH	Page 3 of 23
Filename: TE0765.SchDoc		

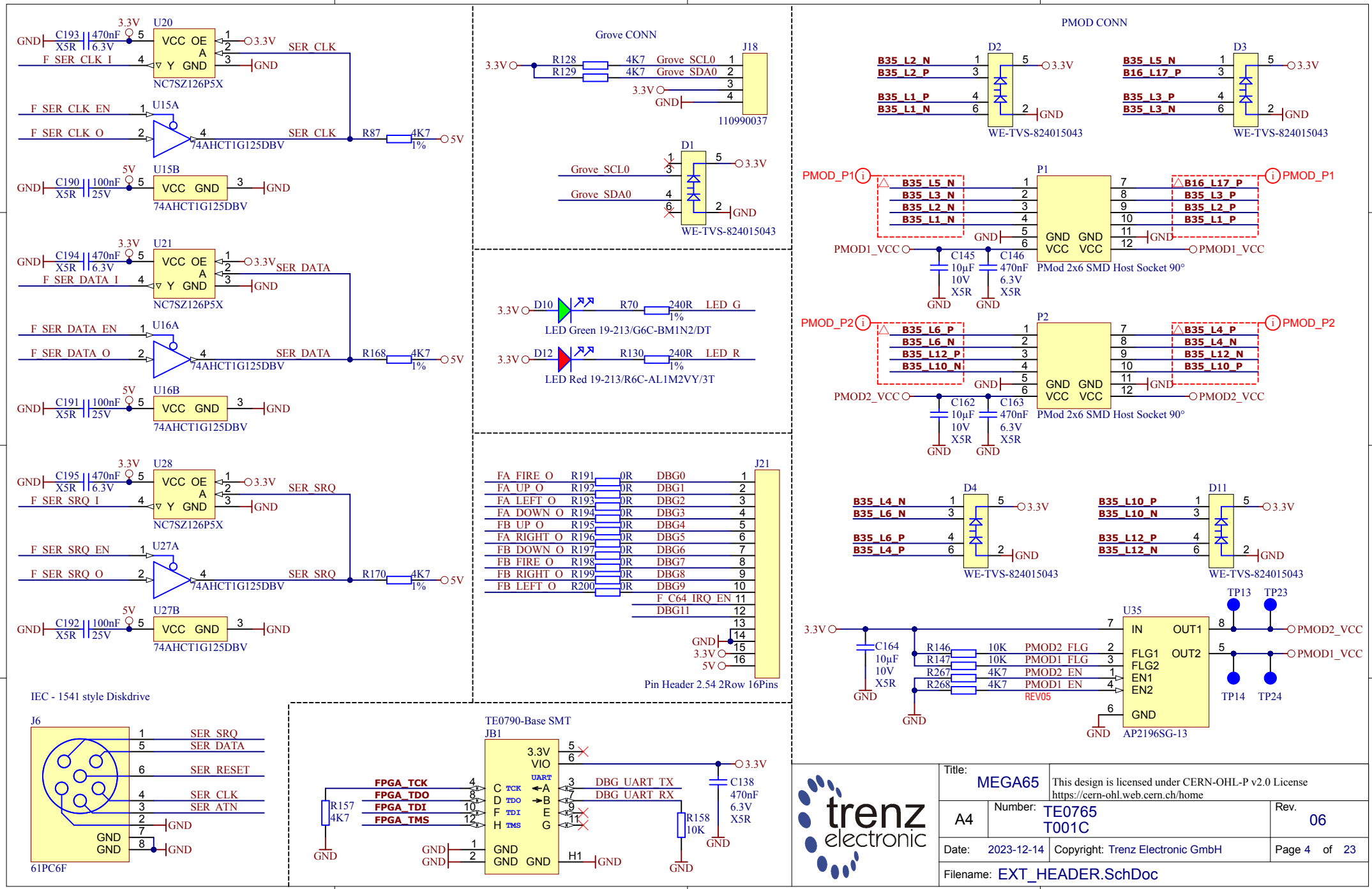
U20
NC7SZ126P5X
U15A
U15B
74AHCT1G125DBV
U21
U16A
U16B
U28
U27A
U27B
SER_CLK
SER_DATA
SER_SRQ
R87 4K7 1%
R168 4K7 1%
R170 4K7 1%
Grove CONN
J18
110990037
D1
WE-TVS-824015043
D10
R70 240R 1%
LED Green 19-213/G6C-BM1N2/DT
D12
R130 240R 1%
LED Red 19-213/R6C-AL1M2VY/3T
J21
Pin Header 2.54 2Row 16Pins
IEC - 1541 style Diskdrive
J6
61PC6F
TE0790-Base SMT
JB1
FPGA_TCK
FPGA_TDO
FPGA_TDI
FPGA_TMS
DBG_UART_TX
DBG_UART_RX
PMOD CONN
D2
D3
P1
PMod 2x6 SMD Host Socket 90°
PMOD1_VCC
PMOD_P1
P2
PMod 2x6 SMD Host Socket 90°
PMOD2_VCC
PMOD_P2
D4
D11
U35
AP2196SG-13
PMOD2_FLG
PMOD1_FLG
PMOD2_EN
PMOD1_EN
REV05
TP13
TP23
TP14
TP24
trenz electronic
Title: MEGA65
This design is licensed under CERN-OHL-P v2.0 License
https://cern-ohl.web.cern.ch/home
A4
Number: TE0765 T001C
Rev. 06
Date: 2023-12-14
Copyright: Trenz Electronic GmbH
Page 4 of 23
Filename: EXT_HEADER.SchDoc

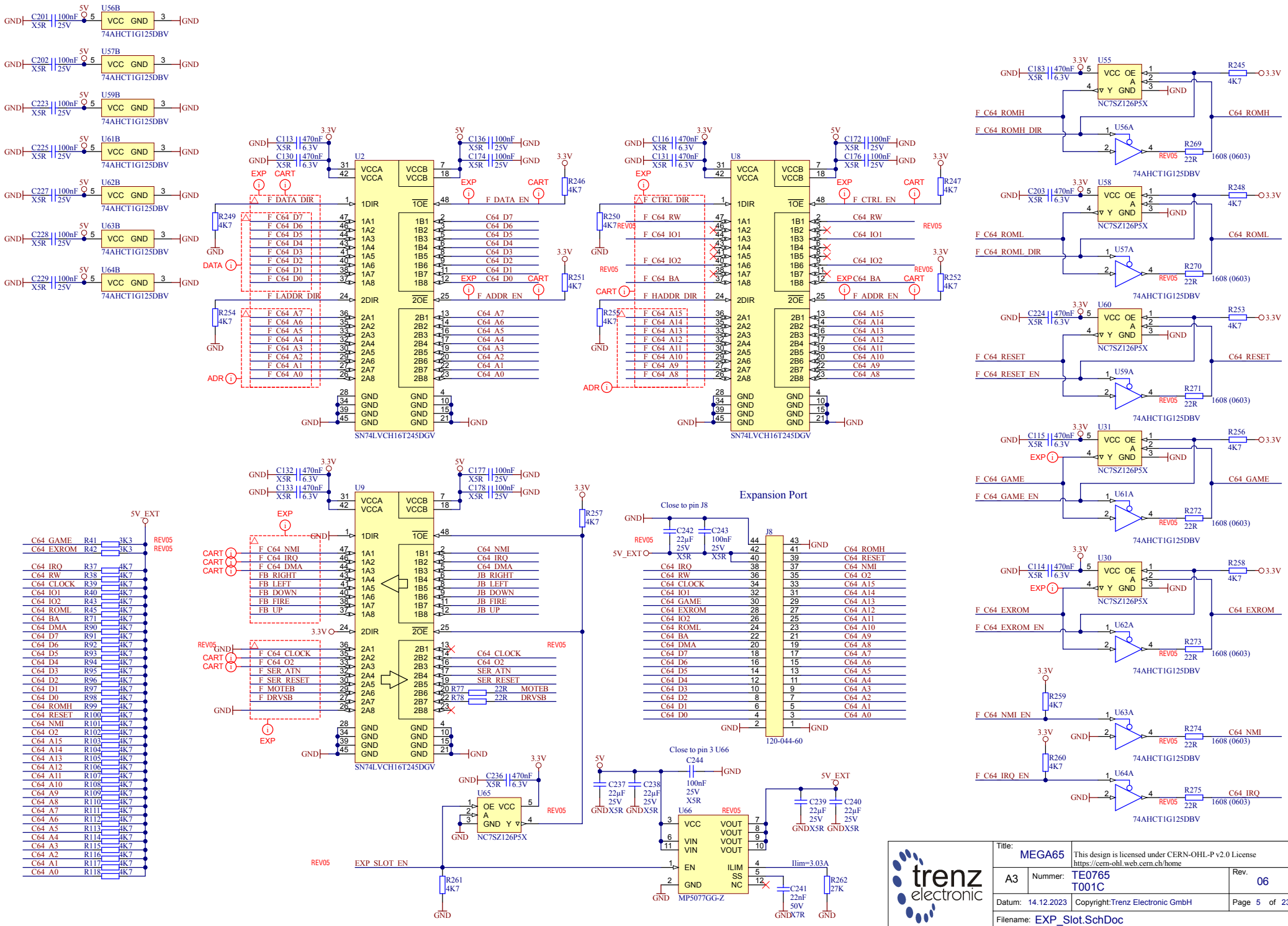
U56B U57B U59B U61B U62B U63B U64B
74AHCT1G125DBV
U2
SN74LVCH16T245DGV
U8
SN74LVCH16T245DGV
U9
SN74LVCH16T245DGV
U55 U58 U60 U31 U30
NC7SZ126P5X
U56A U57A U59A U61A U62A U63A U64A
74AHCT1G125DBV
Expansion Port
J8
120-044-60
Close to pin J8
Close to pin 3 U66
U65
NC7SZ126P5X
U66
MP5077GG-Z
5V_EXT
EXP_SLOT_EN
Title: MEGA65
This design is licensed under CERN-OHL-P v2.0 License
https://cern-ohl.web.cern.ch/home
A3
Nummer: TE0765 T001C
Rev. 06
Datum: 14.12.2023
Copyright:Trenz Electronic GmbH
Page 5 of 23
Filename: EXP_Slot.SchDoc
trenz electronic

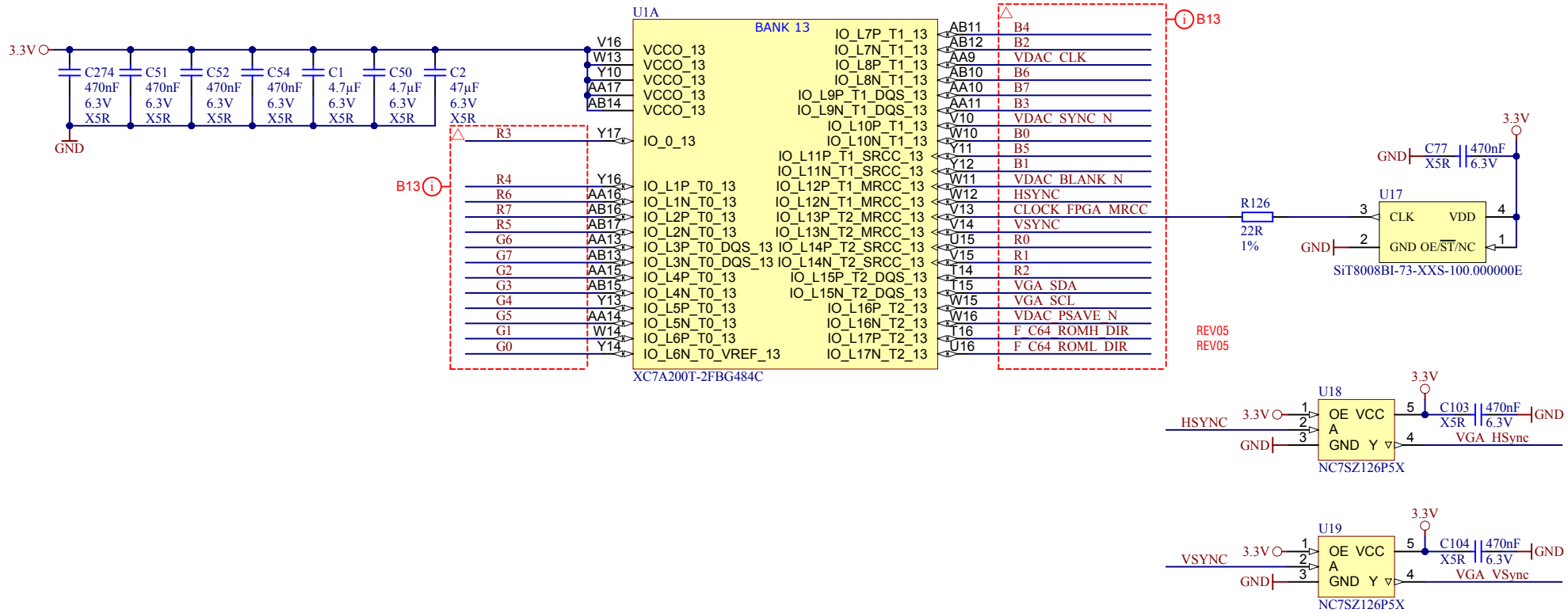

trenz electronic	Title: MEGA65	This design is licensed under CERN-OHL-P v2.0 License https://cern-ohl.web.cern.ch/home	
A4	Number: TE0765 T001C		Rev. 06
Date: 2023-12-14	Copyright: Trenz Electronic GmbH		Page 6 of 23
Filename: B13.SchDoc			

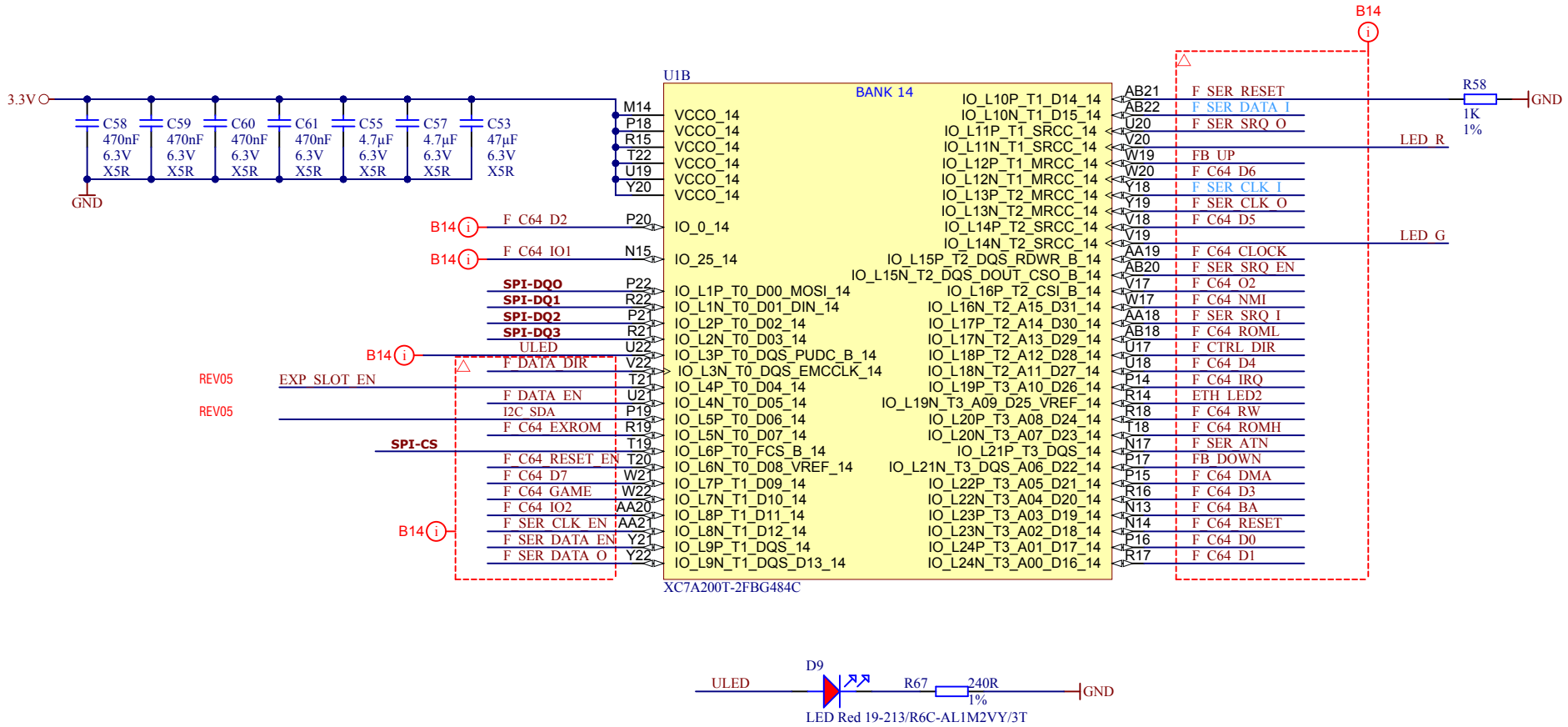

trenz electronic	Title: MEGA65	This design is licensed under CERN-OHL-P v2.0 License https://cern-ohl.web.cern.ch/home	
A4	Number: TE0765 T001C		Rev. 06
Date: 2023-12-14	Copyright: Trenz Electronic GmbH		Page 7 of 23
Filename: B14.SchDoc			

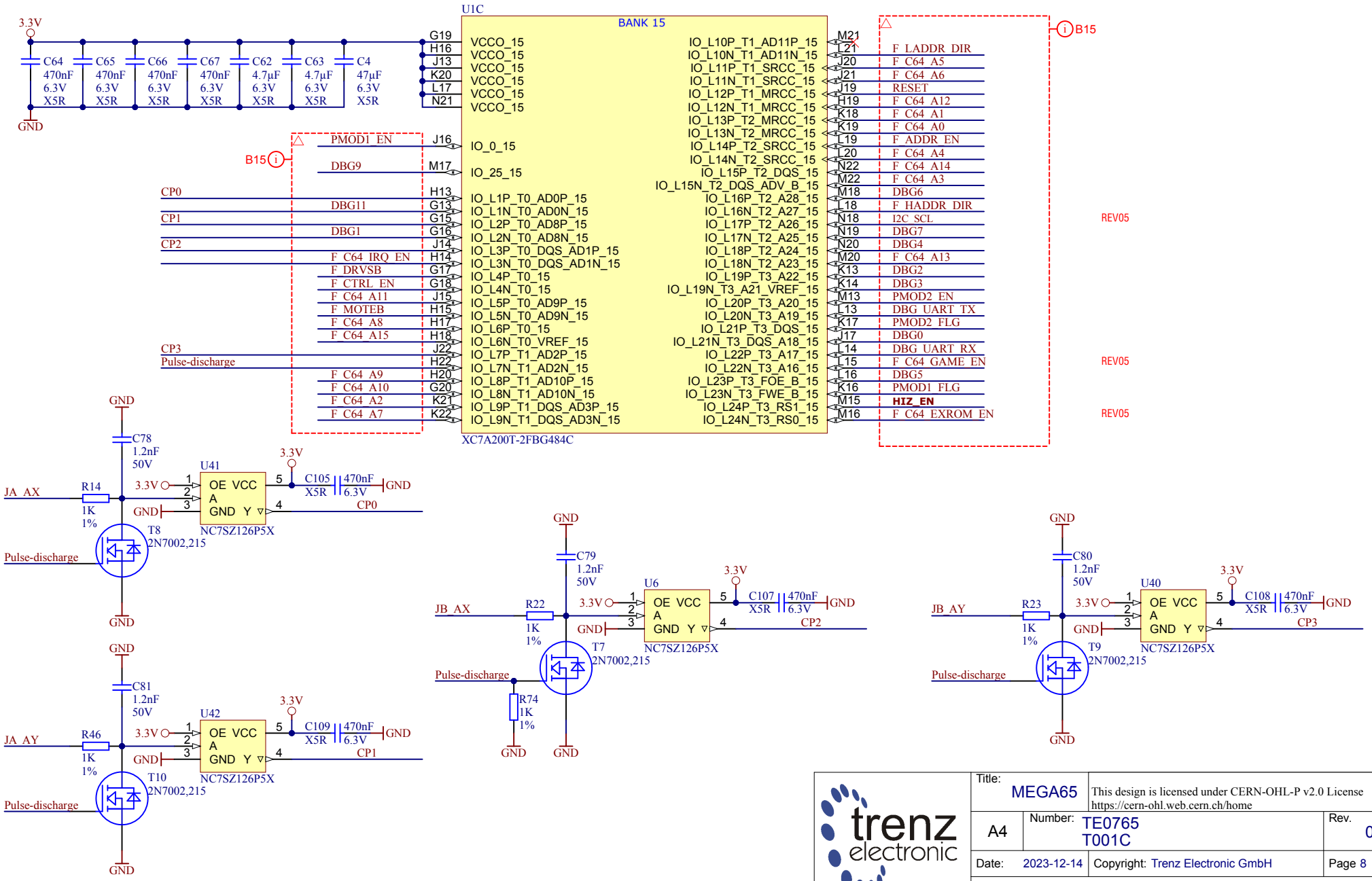

trenz electronic	Title: MEGA65	This design is licensed under CERN-OHL-P v2.0 License https://cern-ohl.web.cern.ch/home
A4	Number: TE0765 T001C	Rev. 06
Date: 2023-12-14	Copyright: Trenz Electronic GmbH	Page 8 of 23
	Filename: B15.SchDoc	

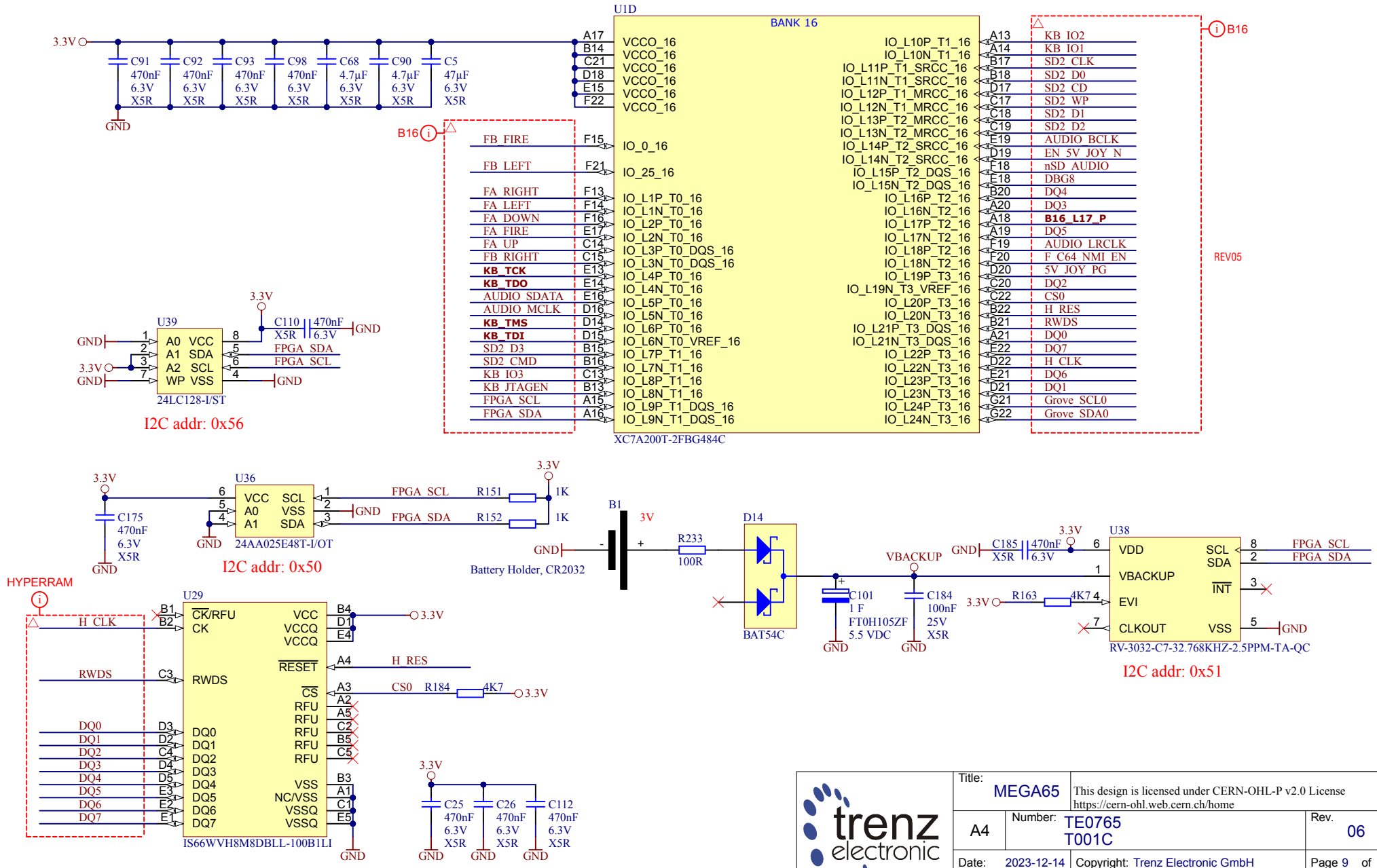

trenz electronic	Title: MEGA65	This design is licensed under CERN-OHL-P v2.0 License https://cern-ohl.web.cern.ch/home
A4	Number: TE0765 T001C	Rev. 06
Date: 2023-12-14	Copyright: Trenz Electronic GmbH	Page 9 of 23
	Filename: B16.SchDoc	

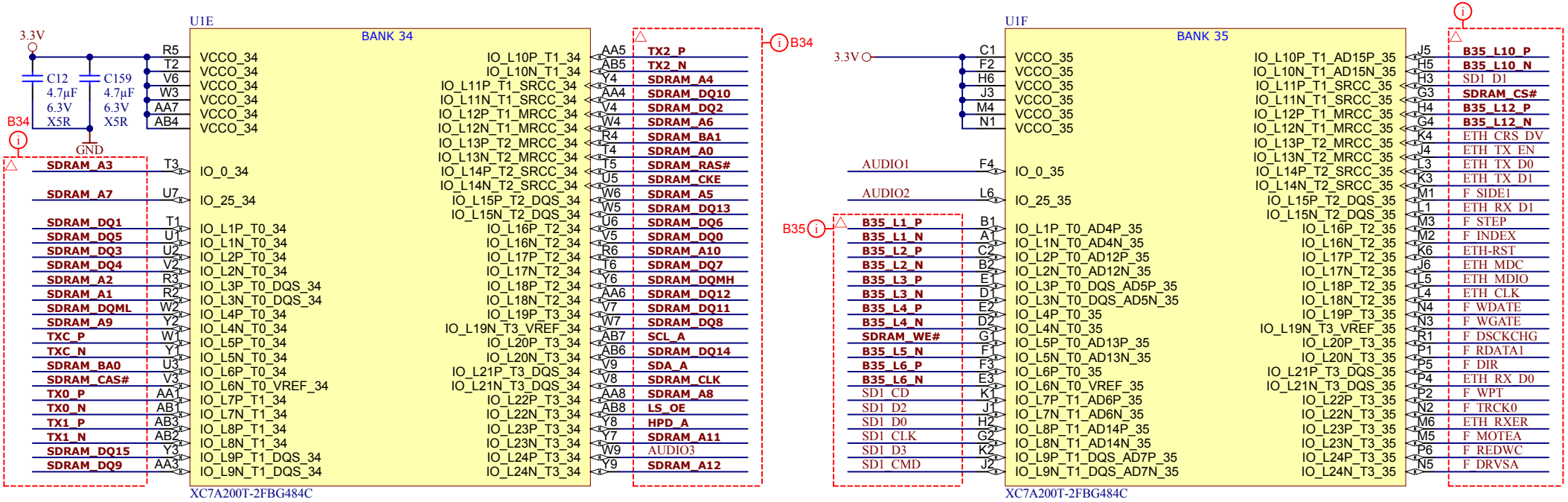

trenz electronic	Title: MEGA65	This design is licensed under CERN-OHL-P v2.0 License https://cern-ohl.web.cern.ch/home	
A4	Number: TE0765 T001C		Rev. 06
Date: 2023-12-14	Copyright: Trenz Electronic GmbH		Page 10 of 23
Filename: B34.SchDoc			

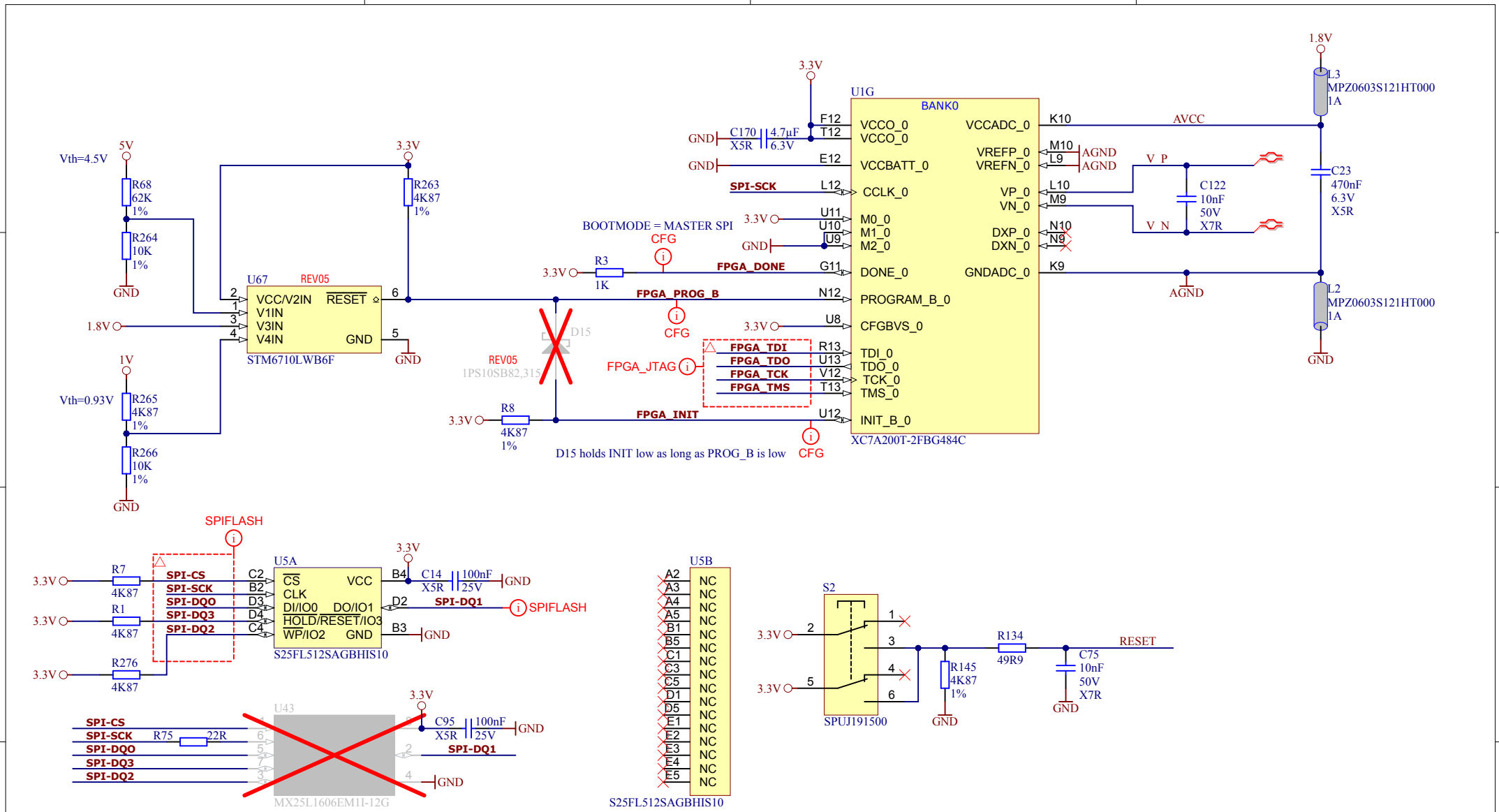

trenz electronic	Title: MEGA65	This design is licensed under CERN-OHL-P v2.0 License https://cern-ohl.web.cern.ch/home
A4	Number: TE0765 T001C	Rev. 06
Date: 2023-12-14	Copyright: Trenz Electronic GmbH	Page 11 of 23
	Filename: FPGA-CFG.SchDoc	

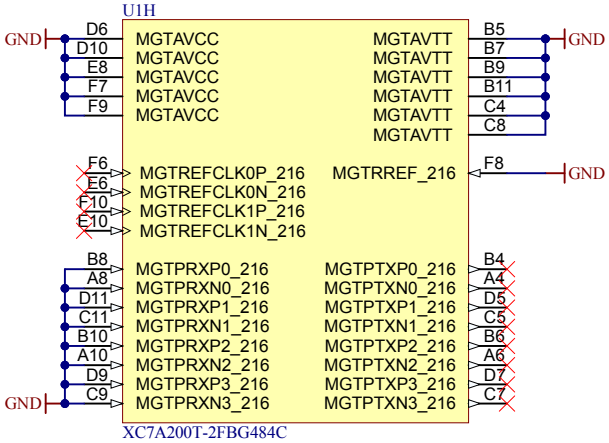

trenz electronic	Title: MEGA65	This design is licensed under CERN-OHL-P v2.0 License https://cern-ohl.web.cern.ch/home	
A4	Number: TE0765 T001C		Rev. 06
Date: 2023-12-14	Copyright: Trenz Electronic GmbH		Page 12 of 23
Filename: FPGA-MGT.SchDoc			

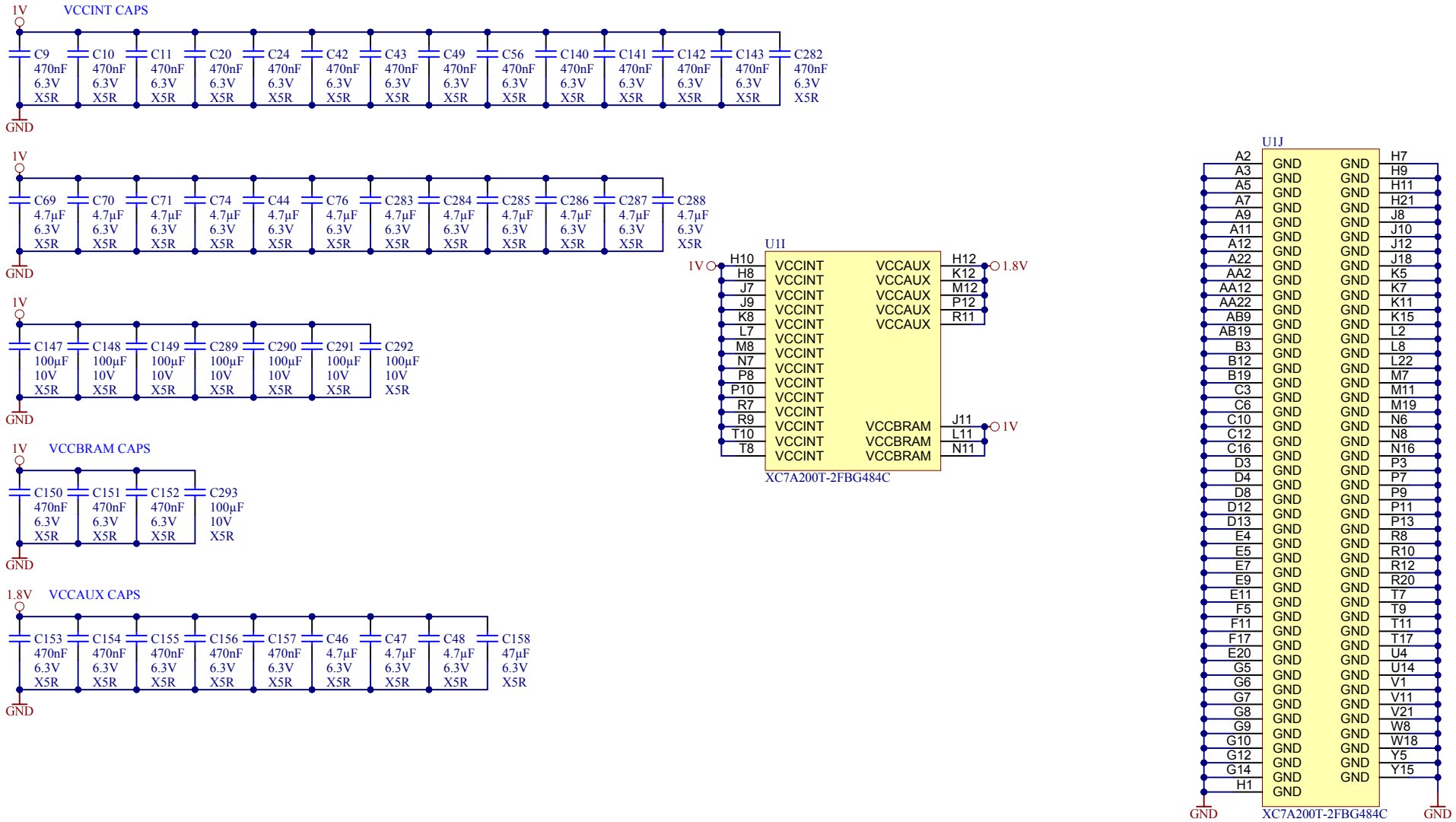

trenz electronic	Title: MEGA65	This design is licensed under CERN-OHL-P v2.0 License https://cern-ohl.web.cern.ch/home	
A4	Number: TE0765 T001C		Rev. 06
Date: 2023-12-14	Copyright: Trenz Electronic GmbH		Page 13 of 23
Filename: FPGA-PWR.SchDoc			

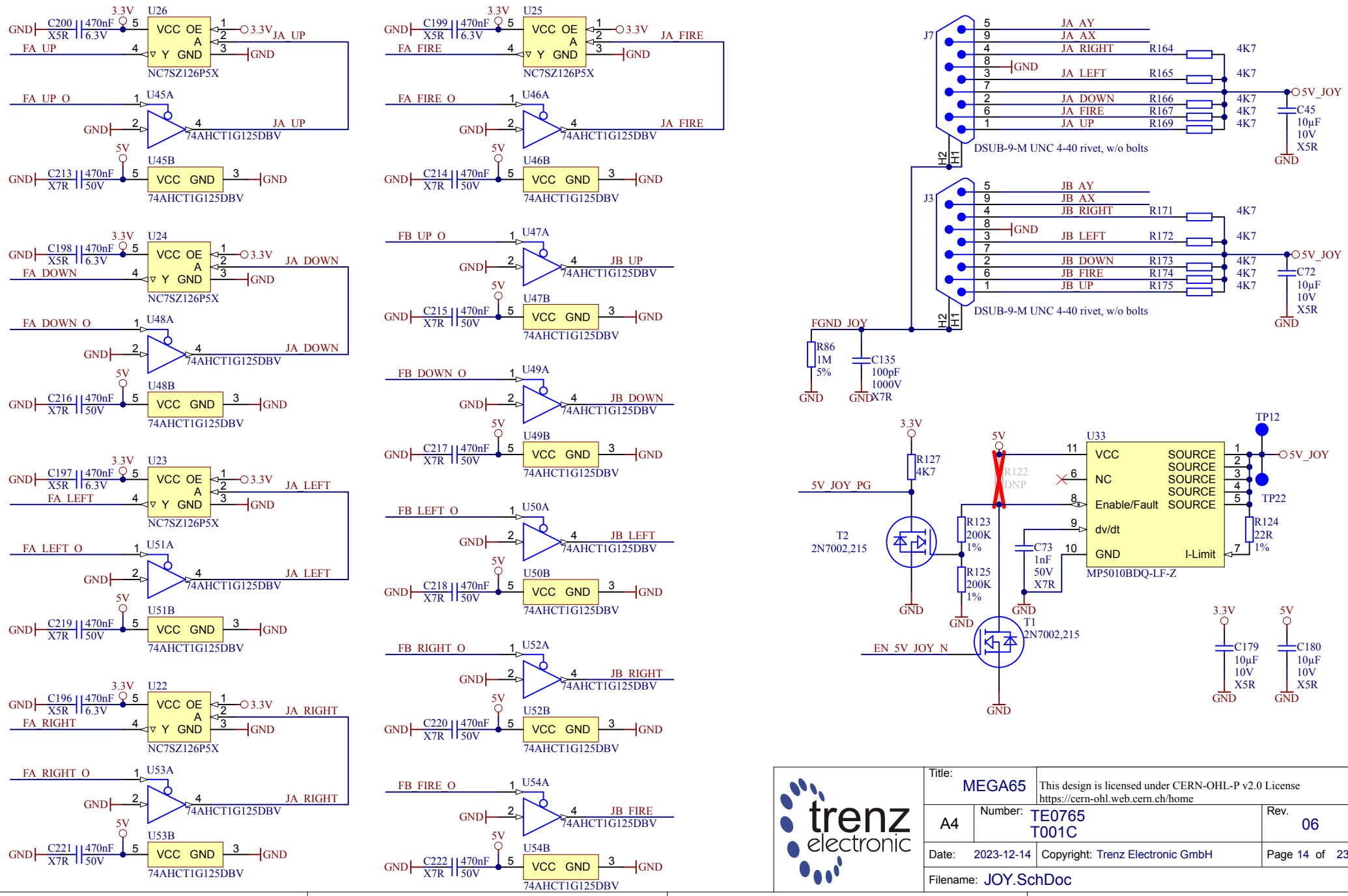

trenz electronic	Title: MEGA65	This design is licensed under CERN-OHL-P v2.0 License https://cern-ohl.web.cern.ch/home
A4	Number: TE0765 T001C	Rev. 06
Date: 2023-12-14	Copyright: Trenz Electronic GmbH	Page 14 of 23
	Filename: JOY.SchDoc	

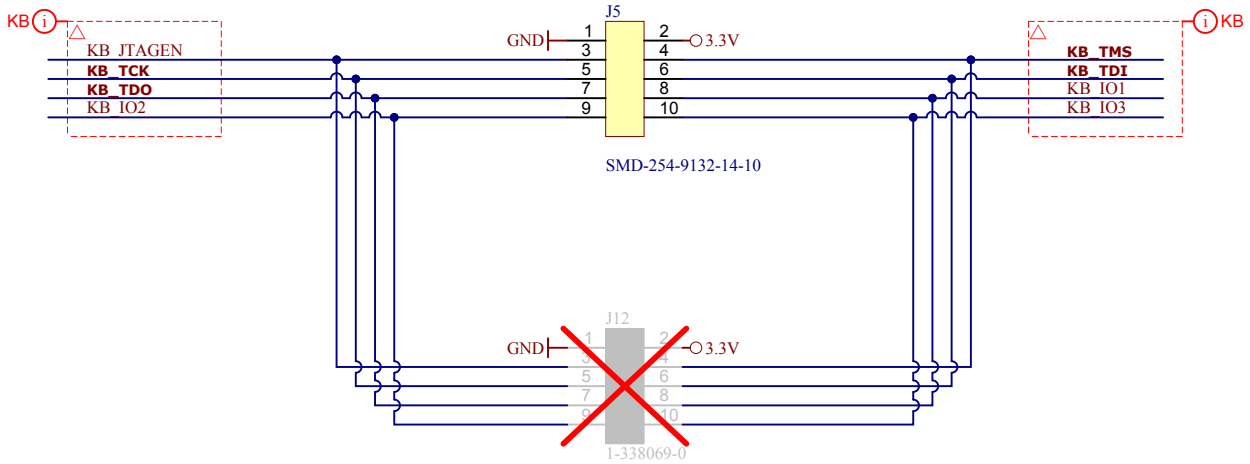

trenz electronic	Title: MEGA65	This design is licensed under CERN-OHL-P v2.0 License https://cern-ohl.web.cern.ch/home	
A4	Number: TE0765 T001C		Rev. 06
Date: 2023-12-14	Copyright: Trenz Electronic GmbH		Page 15 of 23
Filename: KEYBOARD.SchDoc			

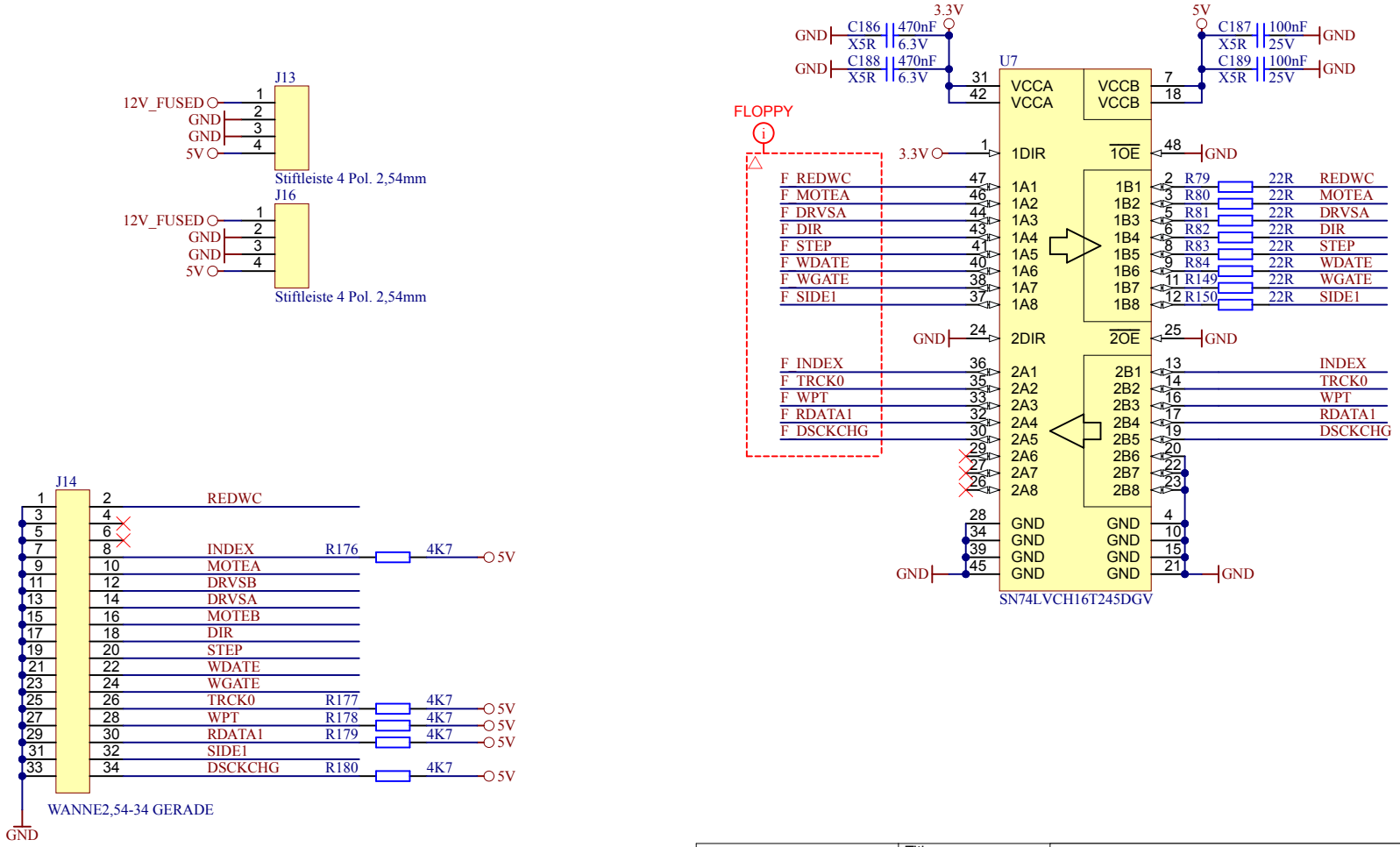

trenz electronic	Title: MEGA65	This design is licensed under CERN-OHL-P v2.0 License https://cern-ohl.web.cern.ch/home	
A4	Number: TE0765 T001C		Rev. 06
Date: 2023-12-14	Copyright: Trenz Electronic GmbH		Page 16 of 23
Filename: Floppy.SchDoc			

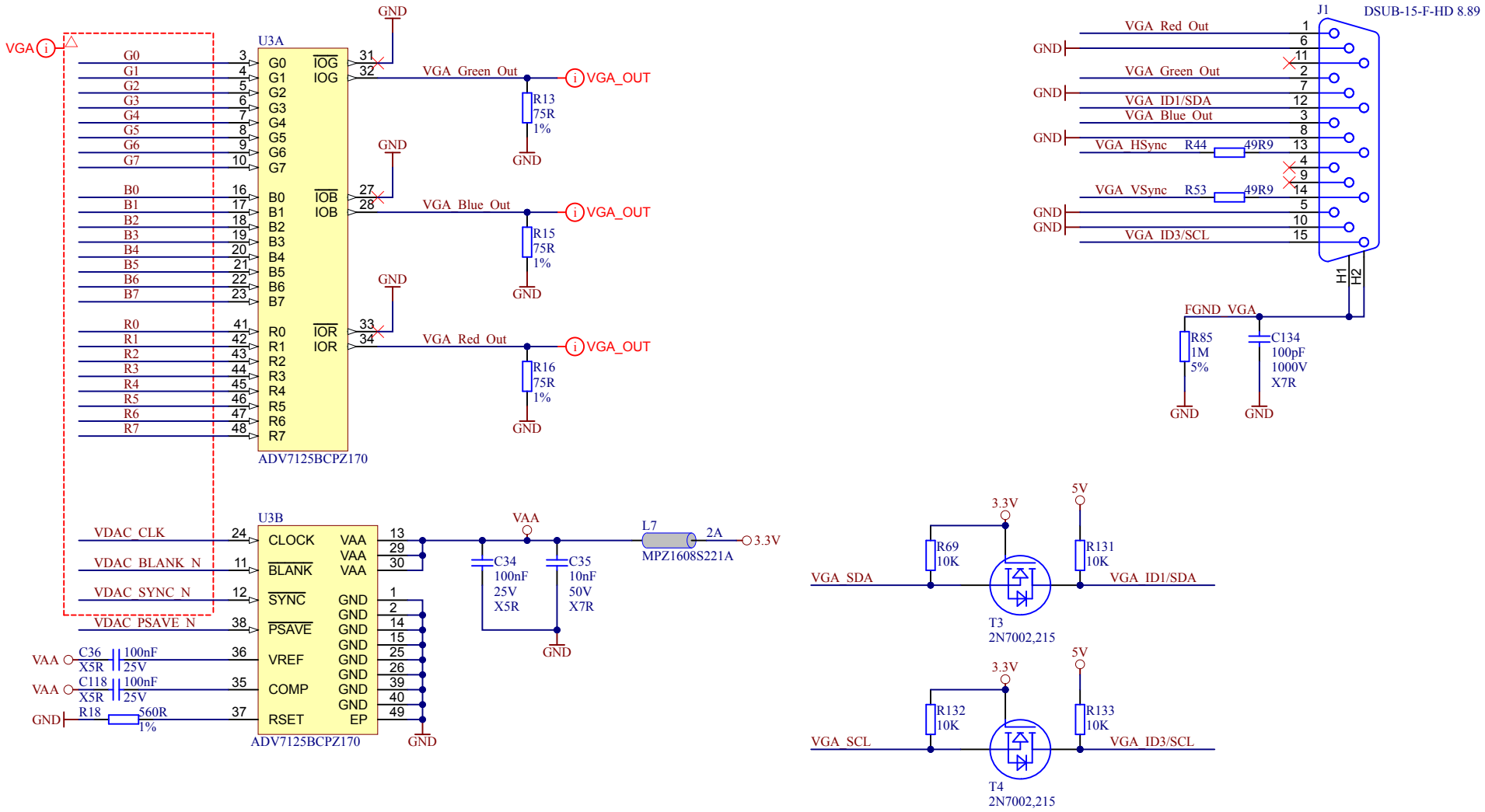

trenz electronic	Title: MEGA65	This design is licensed under CERN-OHL-P v2.0 License https://cern-ohl.web.cern.ch/home	
A4	Number: TE0765 T001C		Rev. 06
Date: 2023-12-14	Copyright: Trenz Electronic GmbH		Page 17 of 23
Filename: VGA.SchDoc			

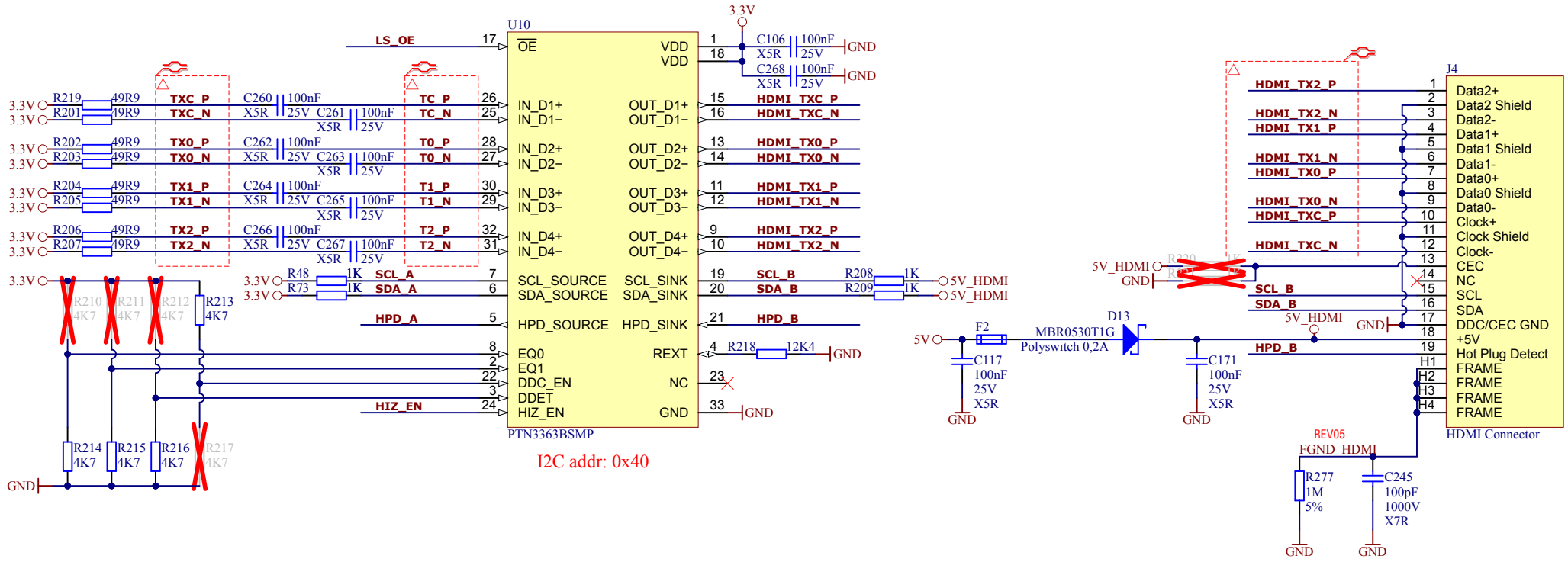

trenz electronic	Title: MEGA65	This design is licensed under CERN-OHL-P v2.0 License https://cern-ohl.web.cern.ch/home	
A4	Number: TE0765 T001C		Rev. 06
Date: 2023-12-14	Copyright: Trenz Electronic GmbH		Page 18 of 23
Filename: HDMI.SchDoc			

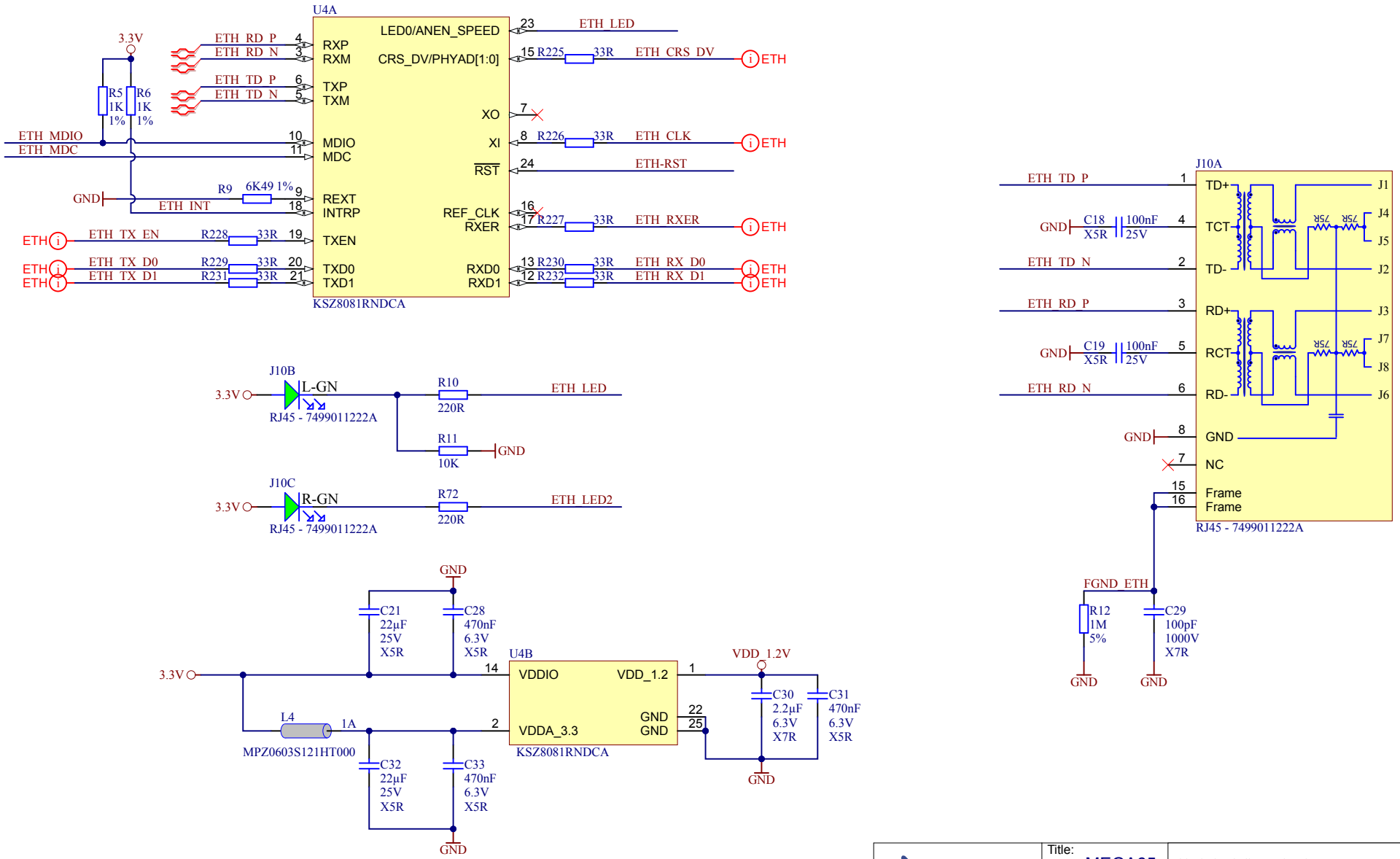

trenz electronic	Title: MEGA65	This design is licensed under CERN-OHL-P v2.0 License https://cern-ohl.web.cern.ch/home
A4	Number: TE0765 T001C	Rev. 06
Date: 2023-12-14	Copyright: Trenz Electronic GmbH	Page 19 of 23
	Filename: Ethernet.SchDoc	

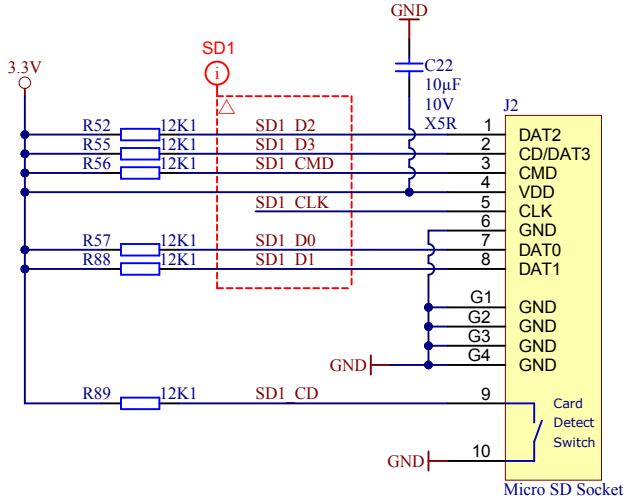

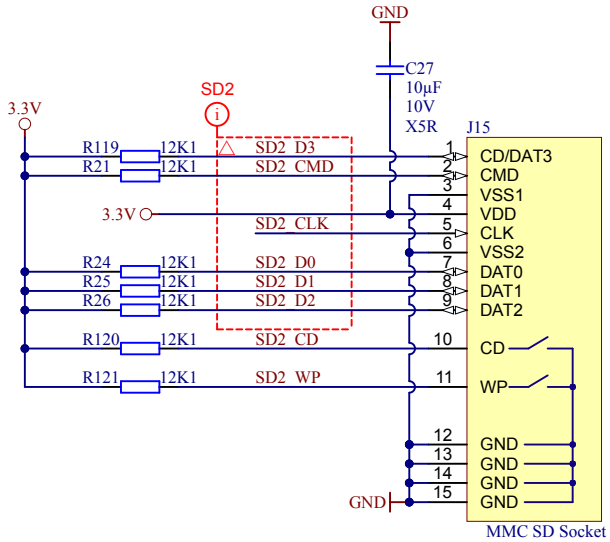

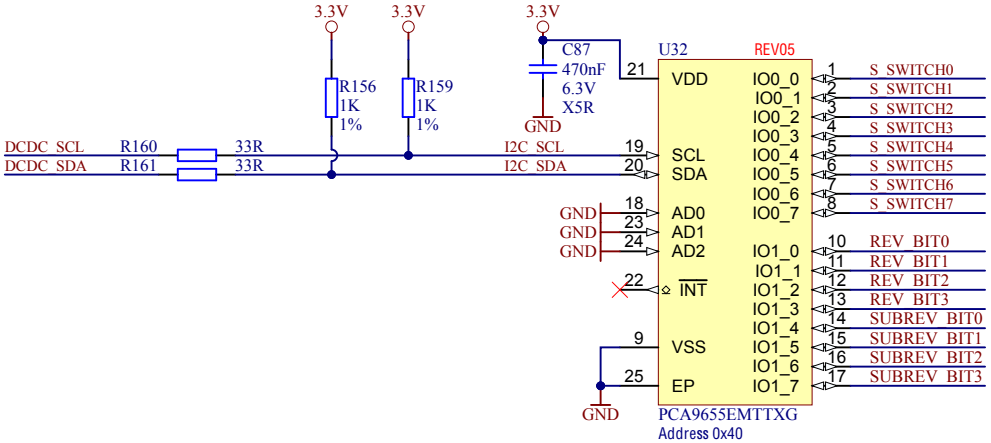

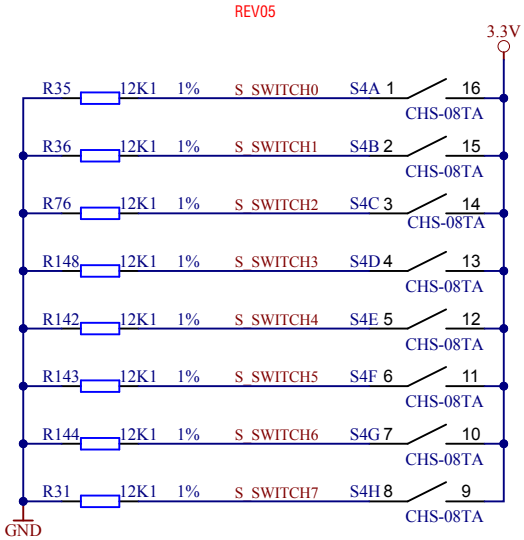

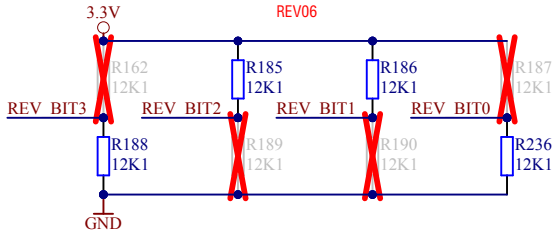

Revision	REV_BIT3	REV_BIT2	REV_BIT1	REV_BIT0
05	0	1	0	1
06	0	1	1	0

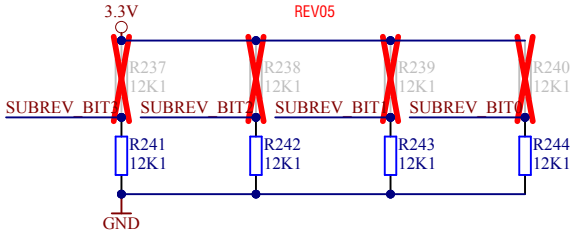

SUBREV	SUBREV_BIT3	SUBREV_BIT2	SUBREV_BIT1	SUBREV_BIT0
00	0	0	0	0

trenz electronic

Title: MEGA65

This design is licensed under CERN-OHL-P v2.0 License
https://cern-ohl.web.cern.ch/home

A4 | Number: TE0765 T001C | Rev. 06

Date: 2023-12-14 | Copyright: Trenz Electronic GmbH |

Filename: LED_SW_BUT.SchDoc

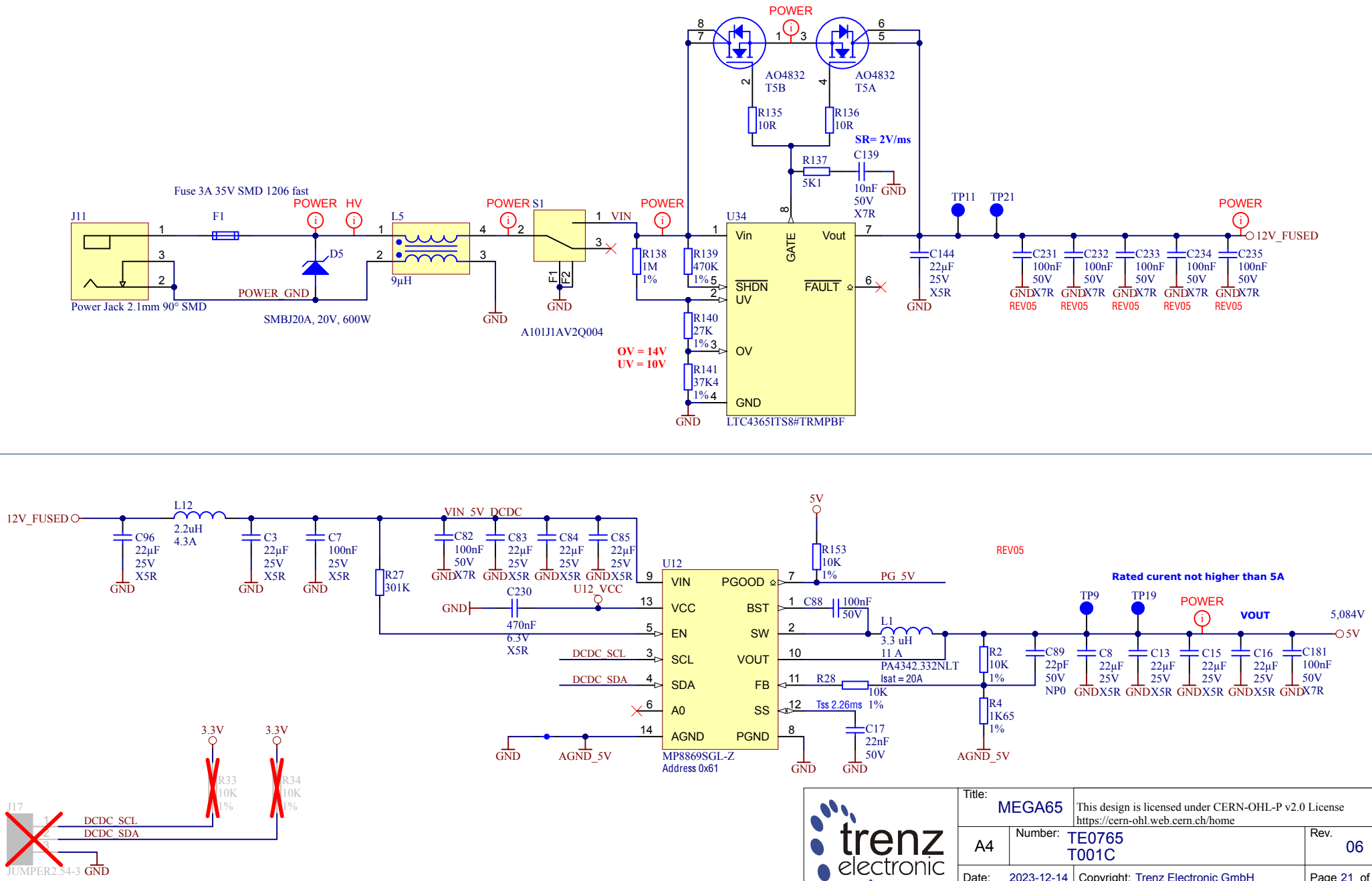

trenz electronic	Title: MEGA65	This design is licensed under CERN-OHL-P v2.0 License https://cern-ohl.web.cern.ch/home	
A4	Number: TE0765 T001C		Rev. 06
Date: 2023-12-14	Copyright: Trenz Electronic GmbH		Page 21 of 23
Filename: PowerMain.SchDoc			

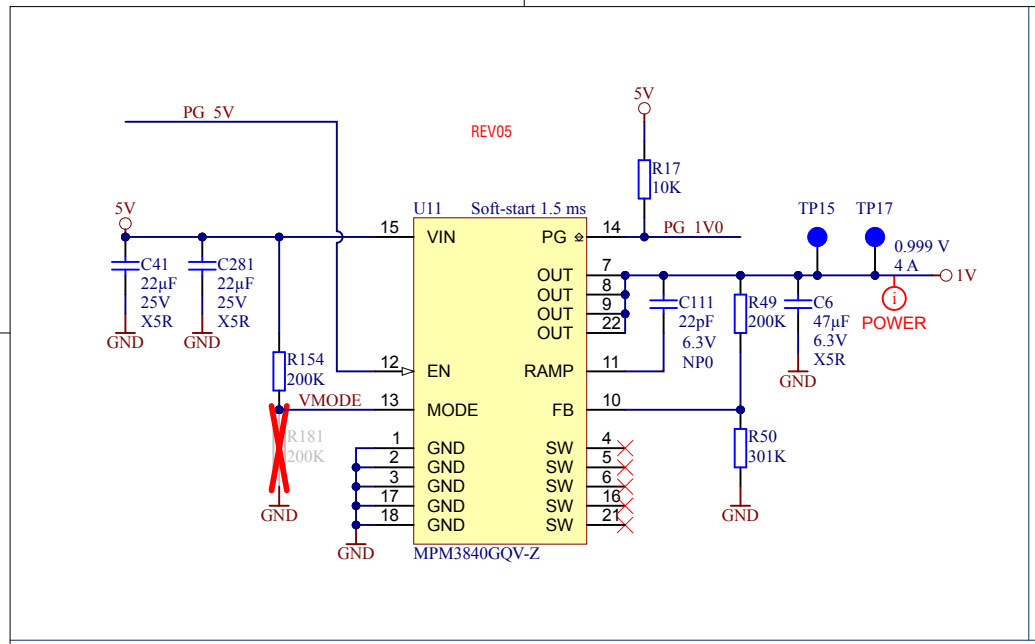

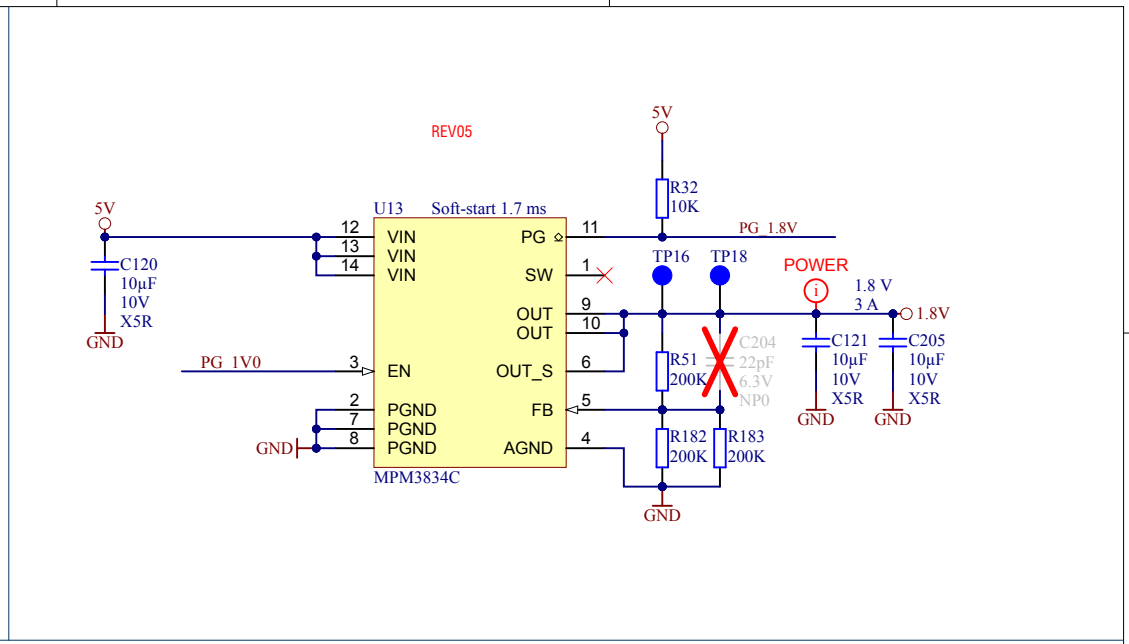

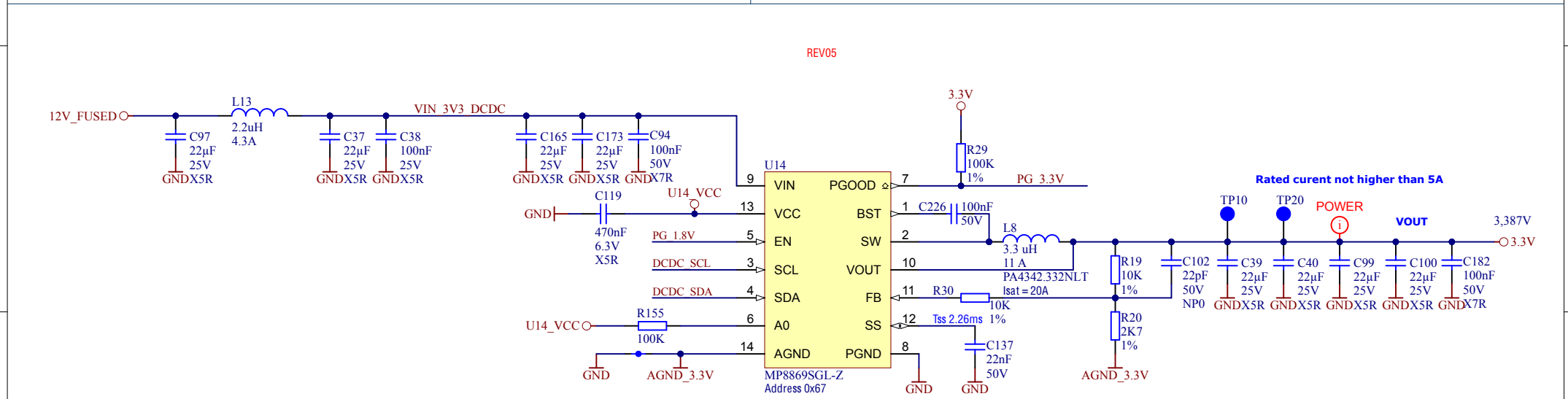

trenz electronic

Title: MEGA65	This design is licensed under CERN-OHL-P v2.0 License https://cern-ohl.web.cern.ch/home	
A4	Number: TE0765 T001C	Rev. 06
Date: 2023-12-14	Copyright: Trenz Electronic GmbH / TT	Page 22 of 23
Filename: POWER.SchDoc		

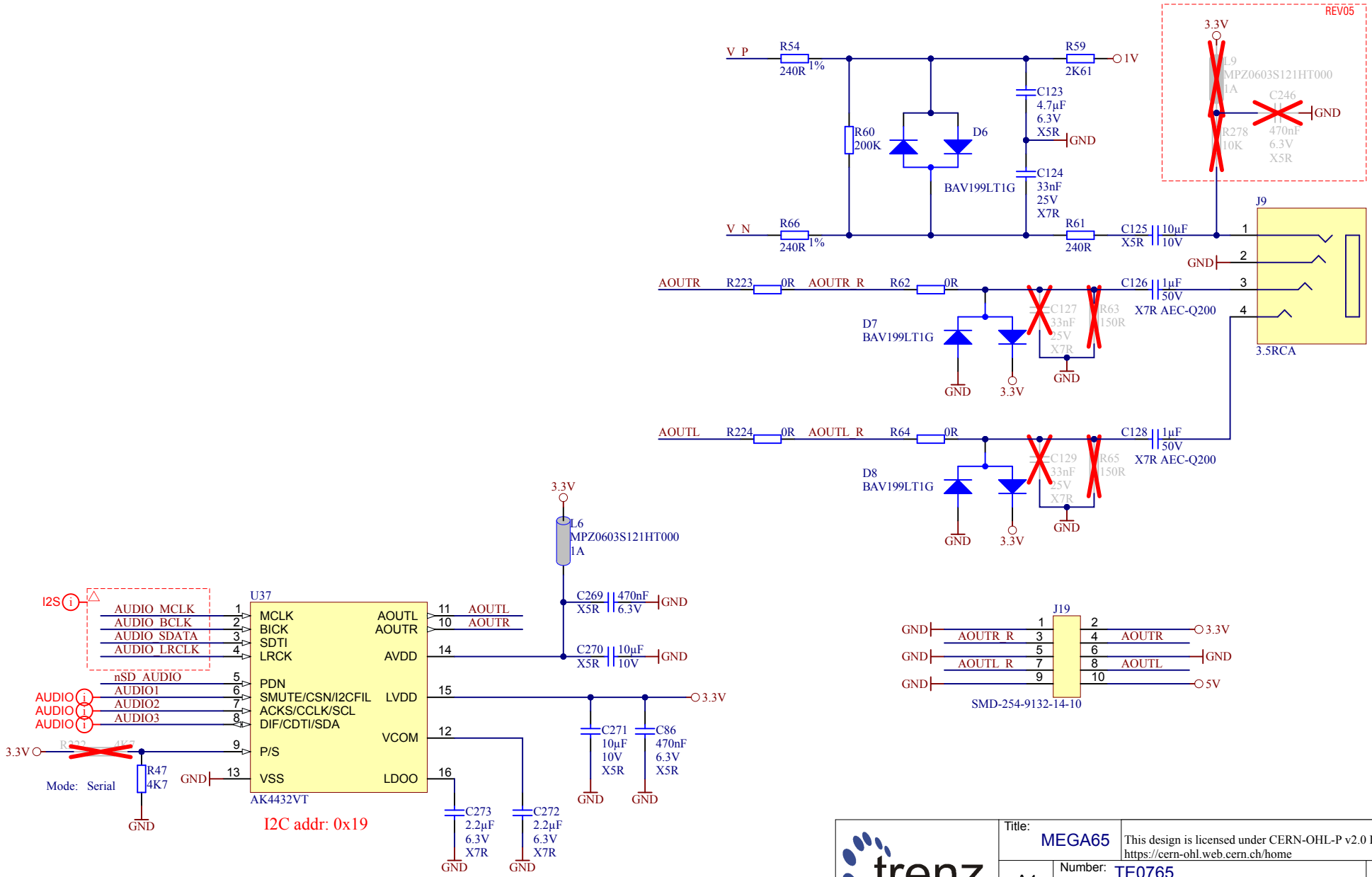

trenz electronic	Title: MEGA65	This design is licensed under CERN-OHL-P v2.0 License https://cern-ohl.web.cern.ch/home	
A4	Number: TE0765 T001C		Rev. 06
Date: 2023-12-14	Copyright: Trenz Electronic GmbH		Page 23 of 23
Filename: SOUND.SchDoc			