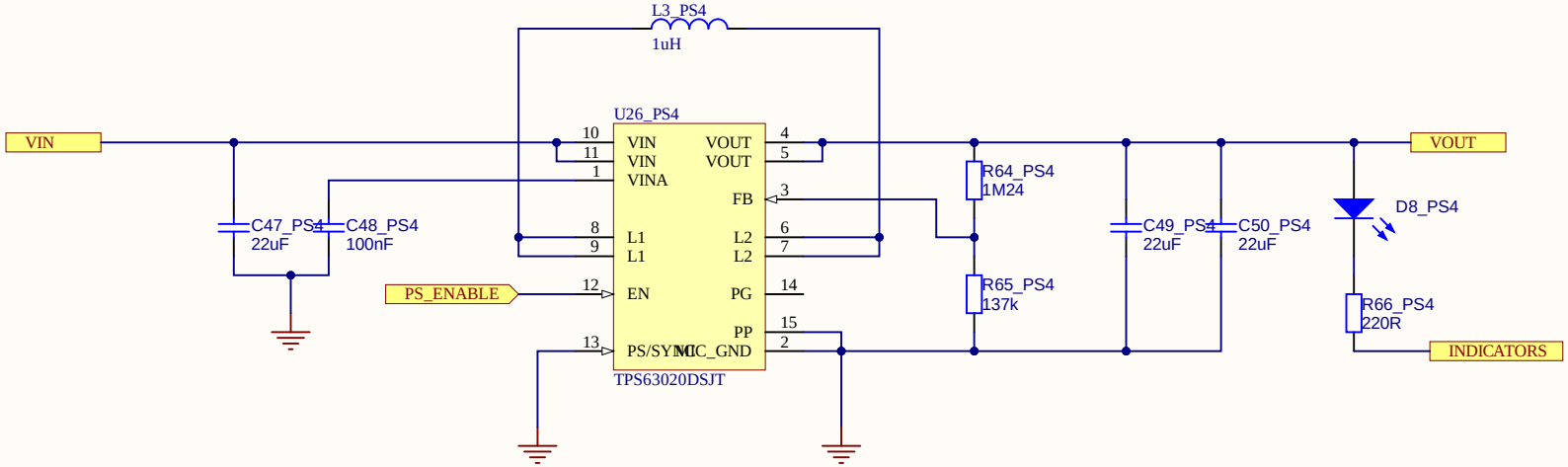

Title		
Size A4	Number	Revision
Date: 4.30.2021		Sheet of
File: D:\projects\..\PowerSupply5V.SchDoc		Drawn By:

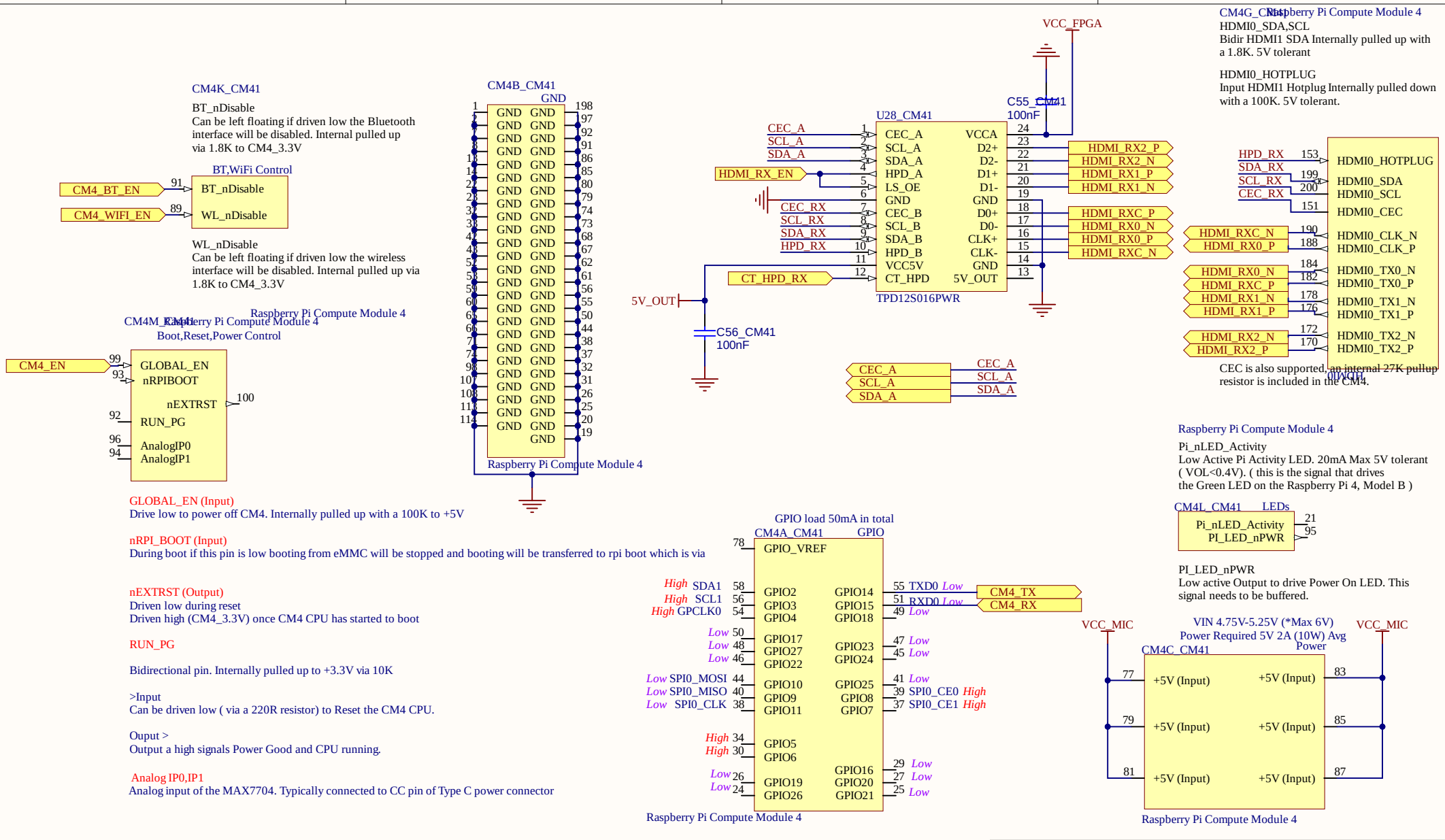

Title		
Size A4	Number	Revision
Date: 4.30.2021	Sheet of	
File: D:\projects\..\CM4.SchDoc	Drawn By:	

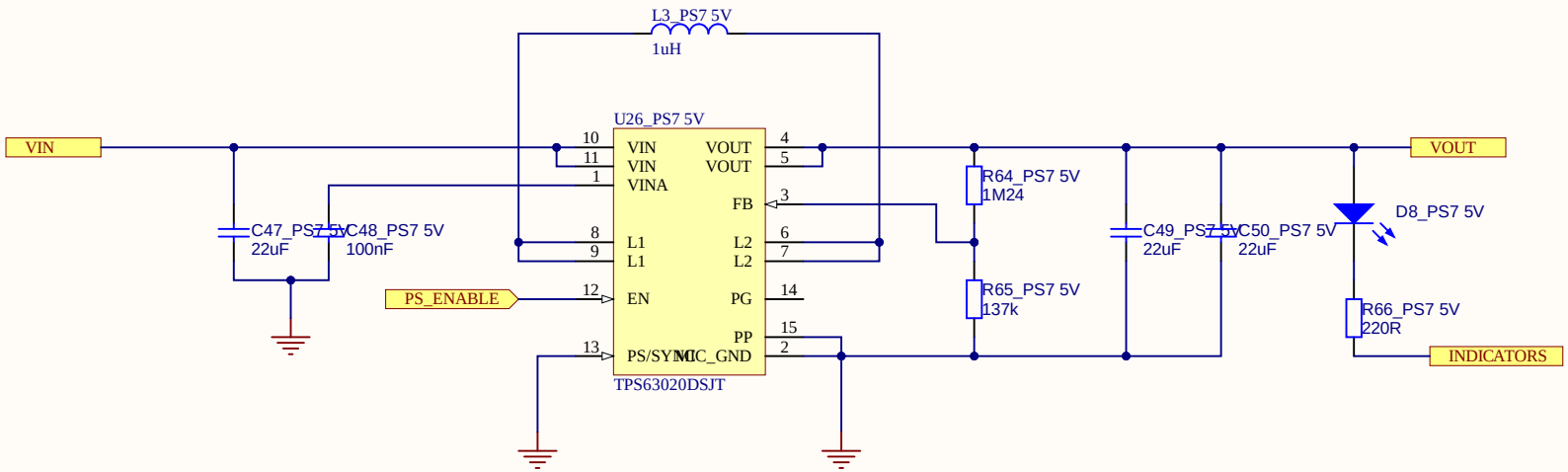

Title		
Size A4	Number	Revision
Date: 4.30.2021		Sheet of
File: D:\projects\..\PowerSupply5V.SchDoc		Drawn By:

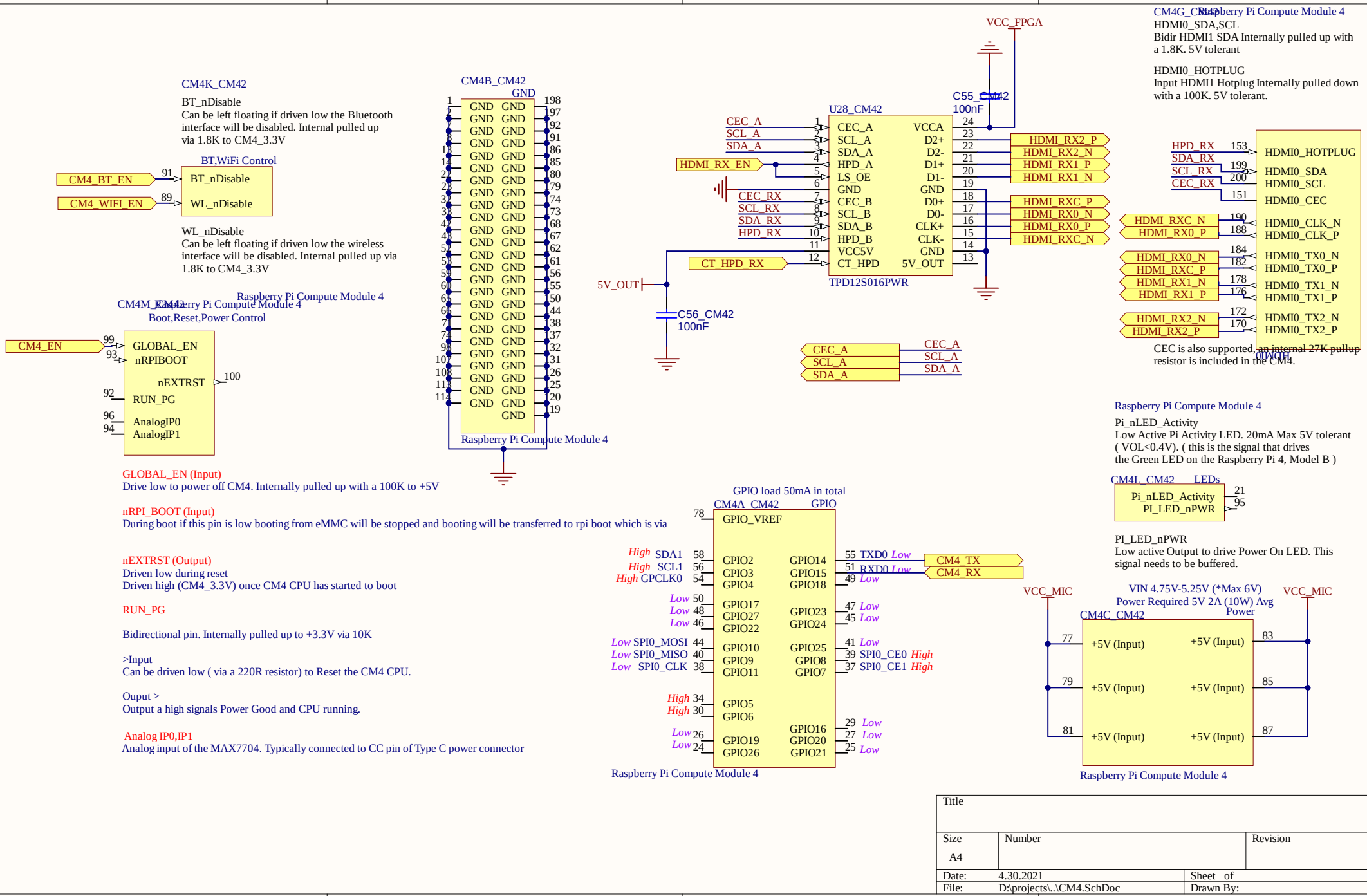

Title		
Size A4	Number	Revision
Date: 4.30.2021		Sheet of
File: D:\projects\..\CM4.SchDoc		Drawn By:

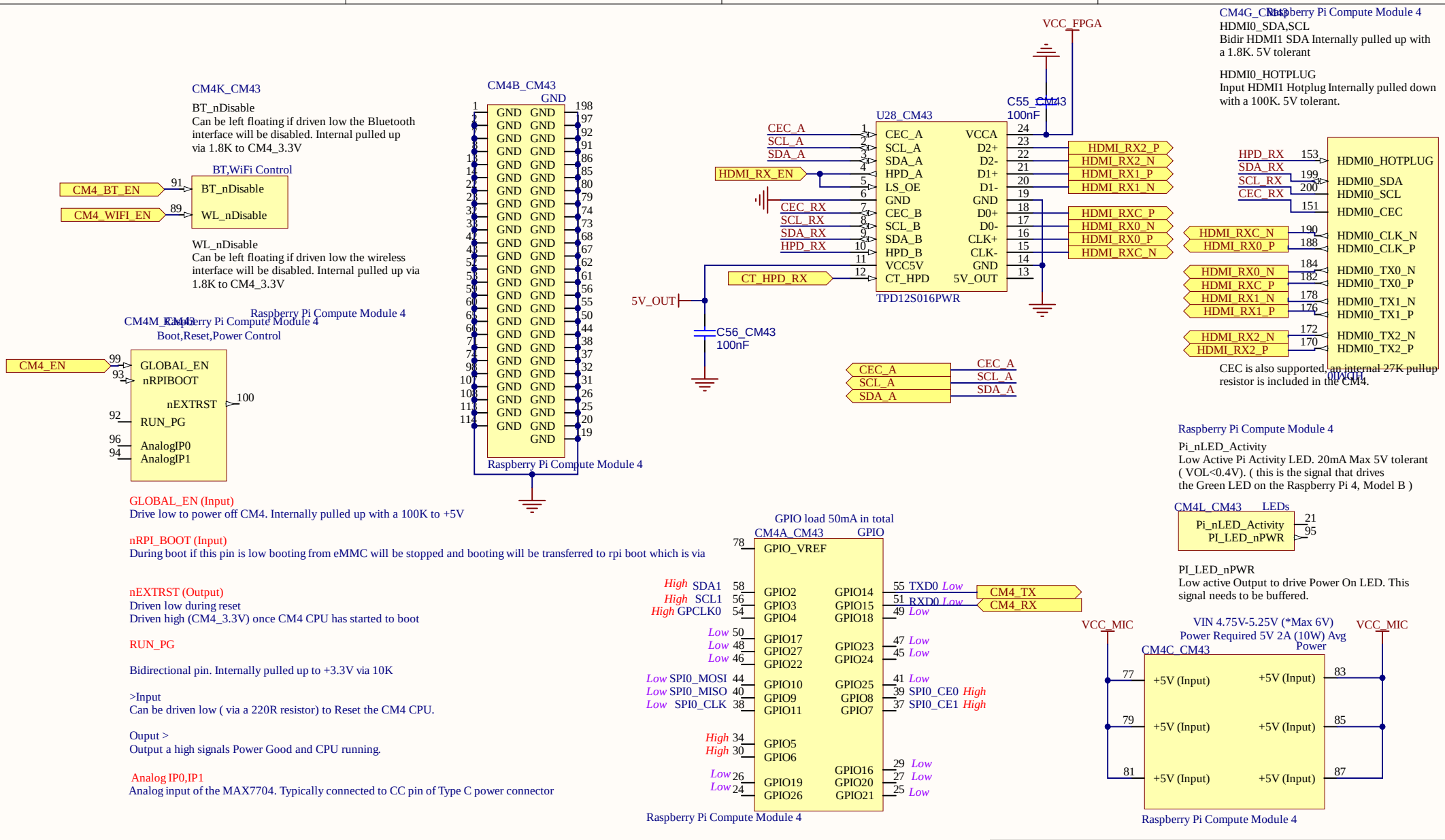

Title		
Size A4	Number	Revision
Date: 4.30.2021		Sheet of
File: D:\projects\..\CM4.SchDoc		Drawn By:

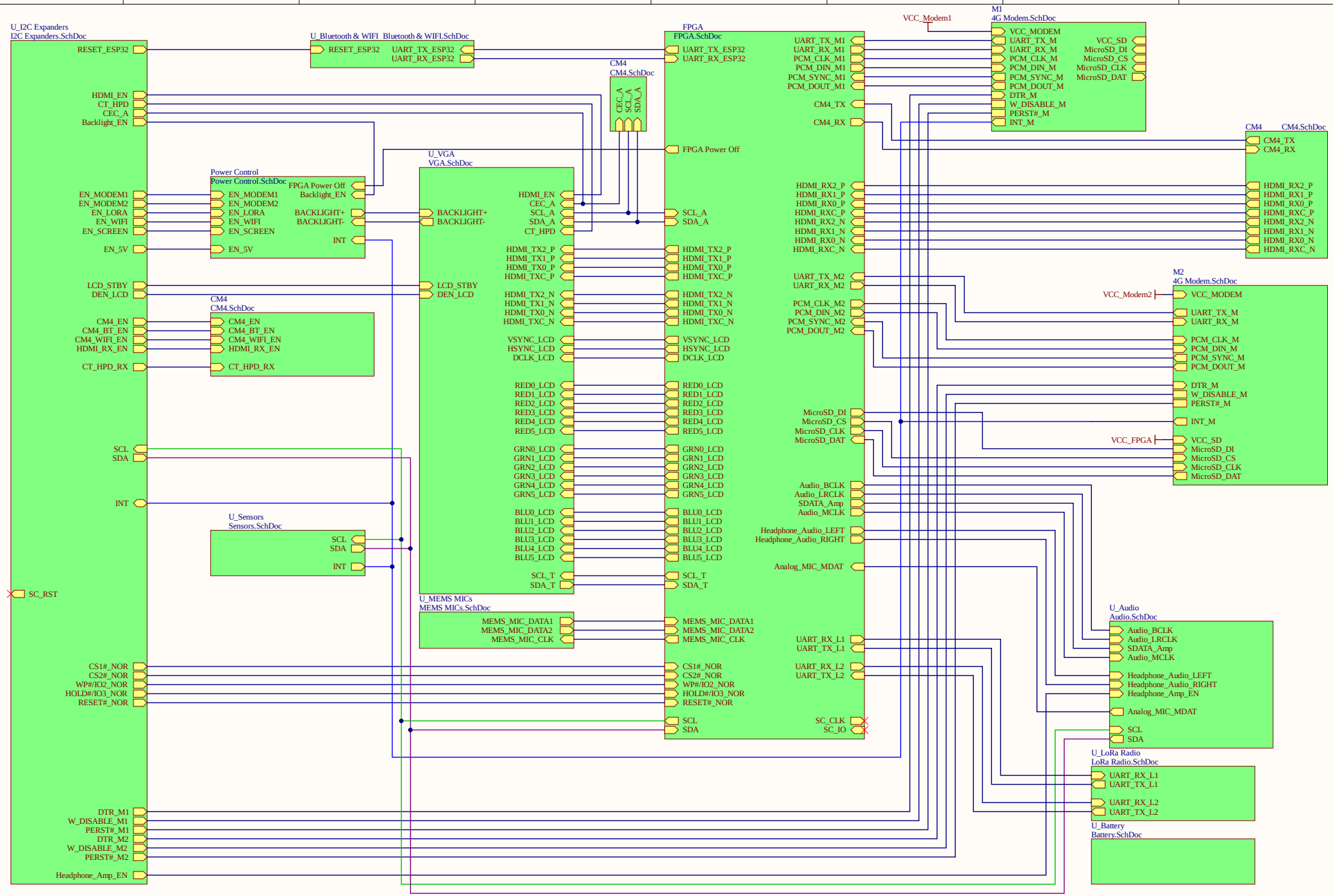

Title	***Mega Phone***		*Flinders University* *College of Science & Engineering* *Engineering Services Room 3.22* *Bedford Park SA* *SA 5042*
Size: A3	Number: A4284	Drawn By: D Kleiss	
Date: 30.4.2021.	Revision: 1	Sheet 1 of 1	
File: D:\projects\lrnas\PCB_designs\Altium\megaphone-r2-nohistory\MEGAphone Overview.SchDoc			

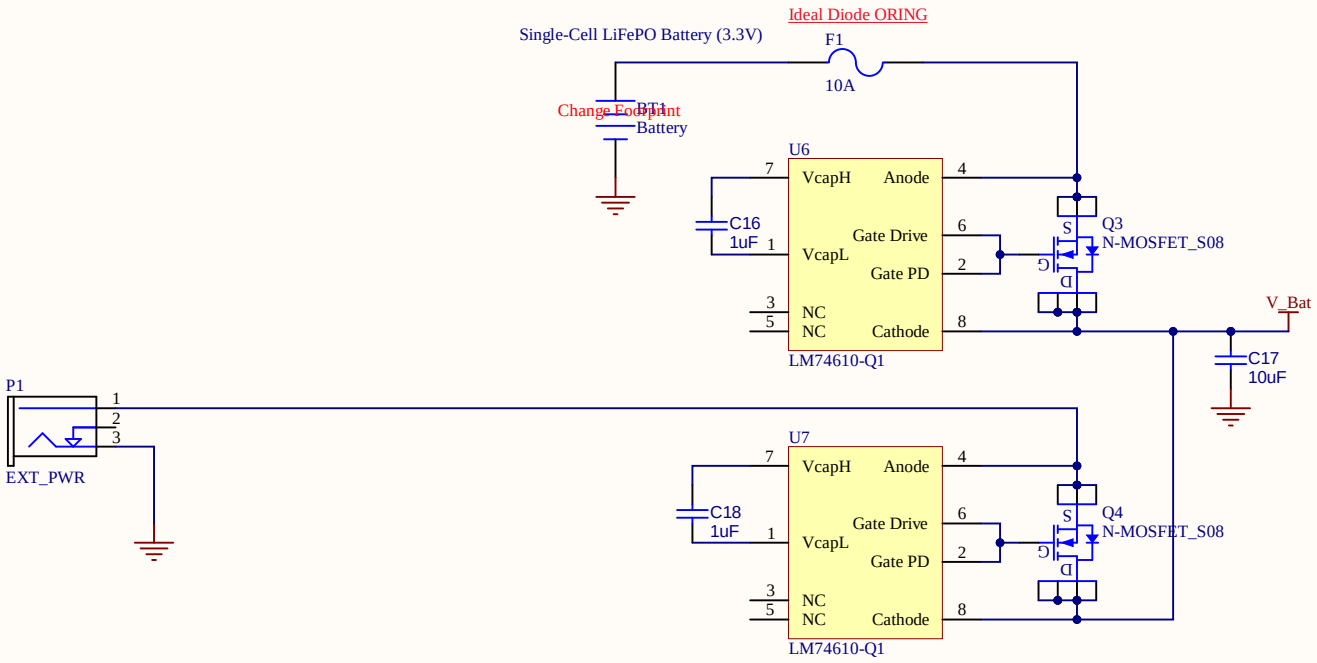

Title	TITLE		Flinders University College of Science & Engineering Engineering Services Room 3.22 1284 South Rd SA 5042
Size: A4	Number: A4	Drawn By: D Kleiss	
Date: 30.4.2021.	Revision: 1	Sheet 1 of 1	
File: D:\projects\lrnas\PCB_designs\Altium\megaphone-r2-nohistory\Battery.SchDoc			

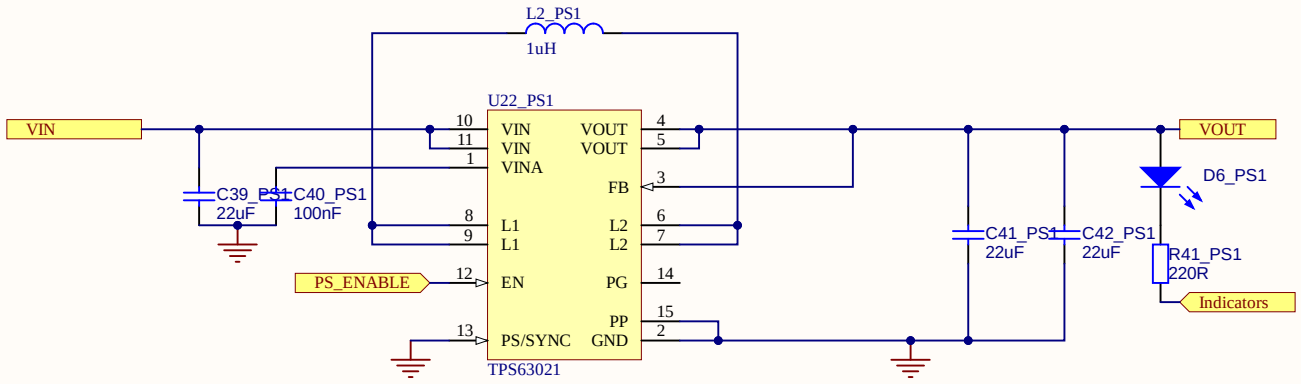

Title **TITLE**			*Flinders University* *College of Science & Engineering* *Engineering Services Room 3.22* *1284 South Rd* *SA 5042*
Size: A4	Number: A4	Drawn By: D Kleiss	
Date: 30.4.2021.	Revision: 1	Sheet 1 of 1	
File: D:\projects\lrnas\PCB_designs\Altium\megaphone-r2-nohistory\PowerSupply.SchDoc			

Sallen-Key Butterworth Low Pass 4th Order Filter

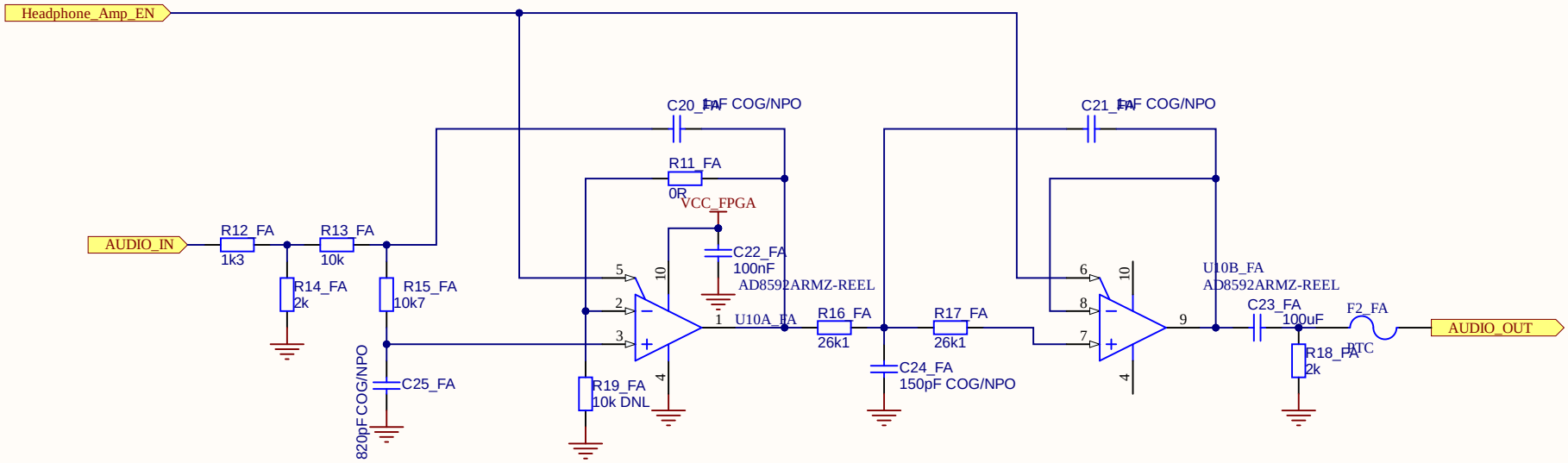

Title	TITLE		Flinders University College of Science & Engineering Engineering Services Room 3.22 1284 South Rd SA 5042
Size: A4	Number: A4	Drawn By: D Kleiss	
Date: 30.4.2021.	Revision: 1	Sheet 1 of 1	
File: D:\projects\lrnas\PCB_designs\Altium\megaphone-r2-nohistory\Headphone Filter.SchDoc			

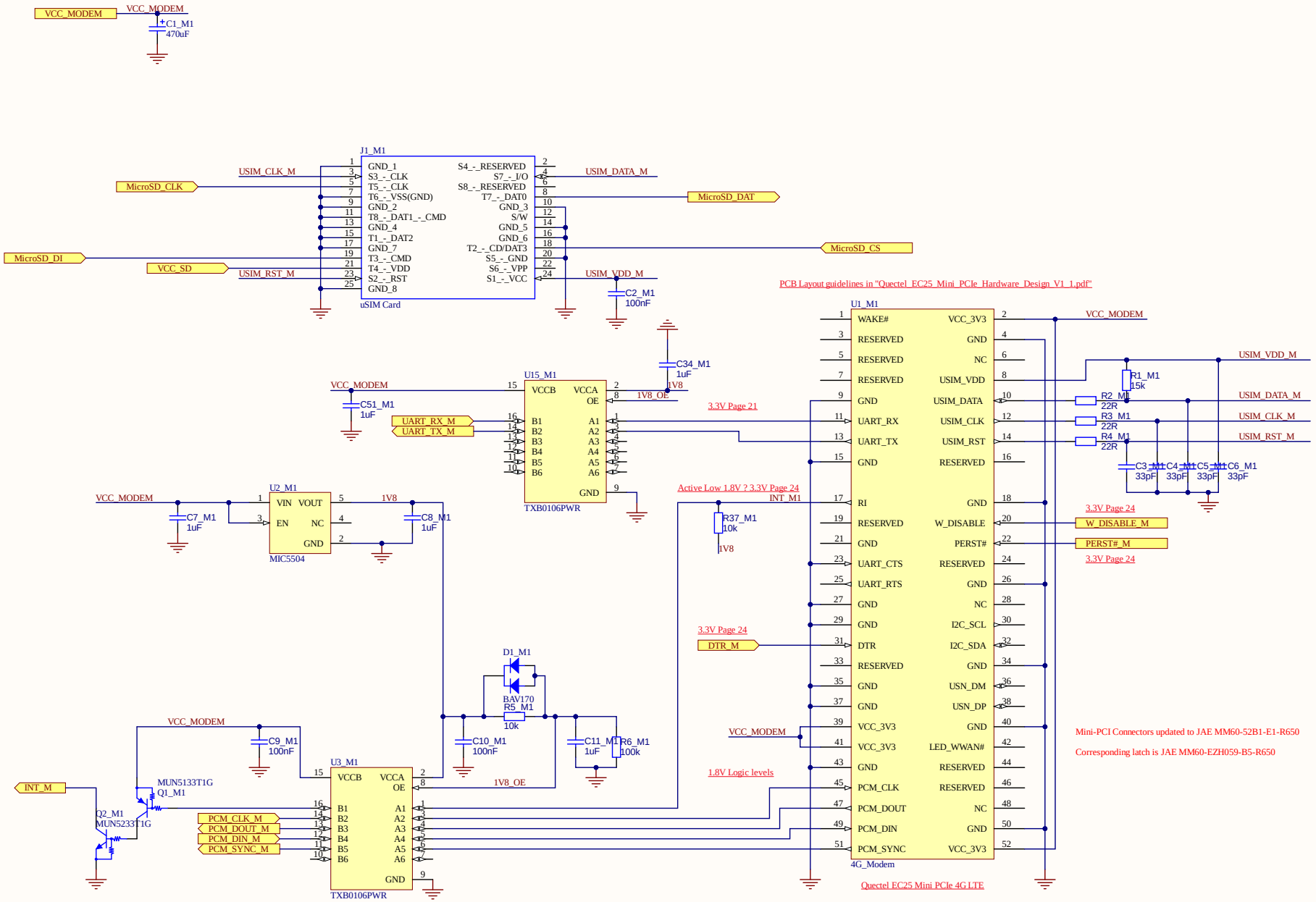

Title	TITLE		Flinders University College of Science & Engineering Engineering Services Room 3.22 Bedford Park SA SA 5042
Size: A3	Number: A4	Drawn By: D Kleiss	
Date: 30.4.2021.	Revision: 1	Sheet 1 of 1	
File: D:\projects\lrnas\PCB_designs\Altium\megaphone-r2-nohistory\4G Modem.SchDoc			

6 17
Lachlan McDonald

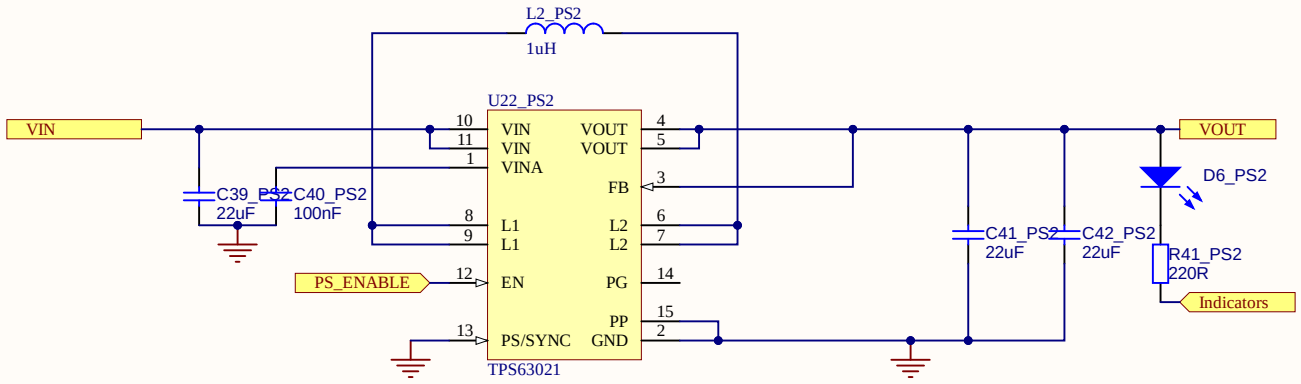

Title **TITLE**			*Flinders University* *College of Science & Engineering* *Engineering Services Room 3.22* *1284 South Rd* *SA 5042*
Size: A4	Number: A4	Drawn By: D Kleiss	
Date: 30.4.2021.	Revision: 1	Sheet 1 of 1	
File: D:\projects\lrnas\PCB_designs\Altium\megaphone-r2-nohistory\PowerSupply.SchDoc			

Sallen-Key Butterworth Low Pass 4th Order Filter

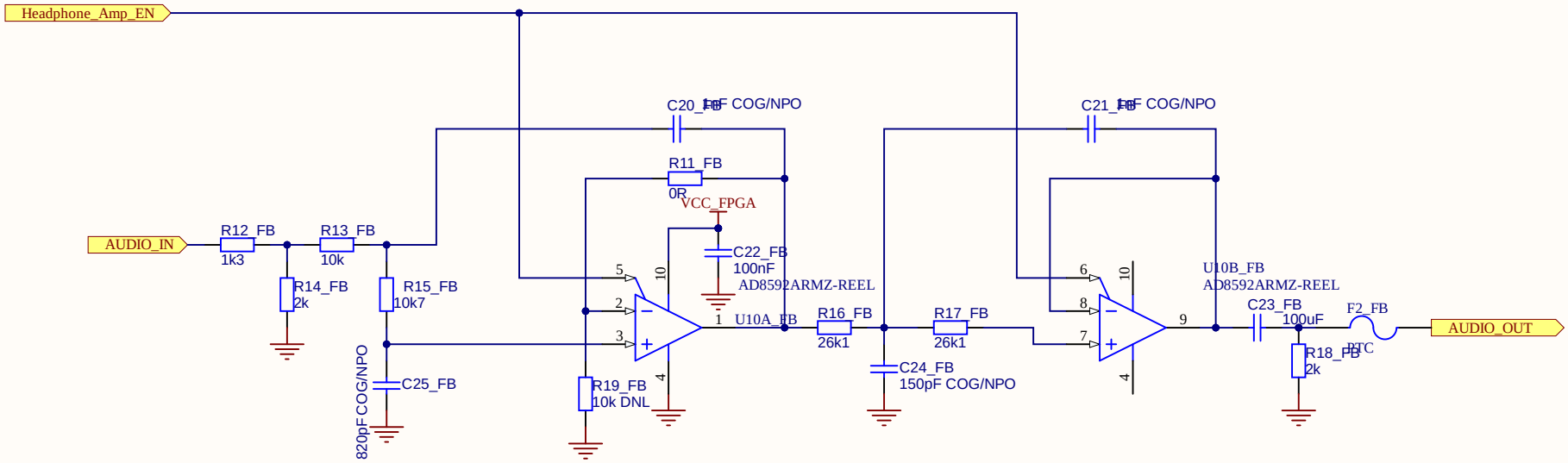

Title	TITLE		Flinders University College of Science & Engineering Engineering Services Room 3.22 1284 South Rd SA 5042
Size: A4	Number: A4	Drawn By: D Kleiss	
Date: 30.4.2021.	Revision: 1	Sheet 1 of 1	
File: D:\projects\lrnas\PCB_designs\Altium\megaphone-r2-nohistory\Headphone Filter.SchDoc			

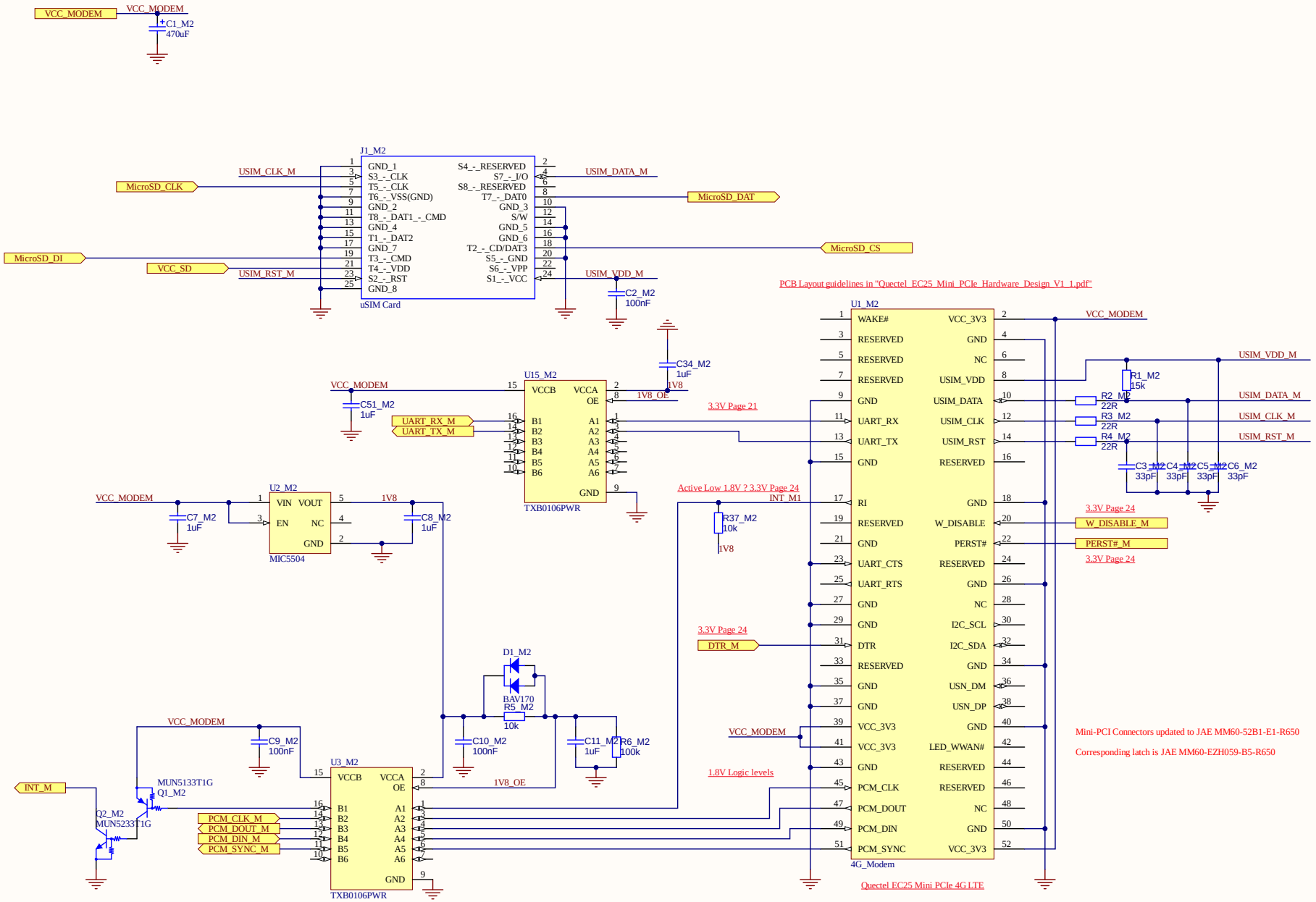

Title	TITLE		Flinders University College of Science & Engineering Engineering Services Room 3.22 Bedford Park SA SA 5042
Size: A3	Number: A4	Drawn By: D Kleiss	
Date: 30.4.2021.	Revision: 1	Sheet 1 of 1	
File: D:\projects\lrnas\PCB_designs\Altium\megaphone-r2-nohistory\4G Modem.SchDoc			

6 17
Lachlan McDonald

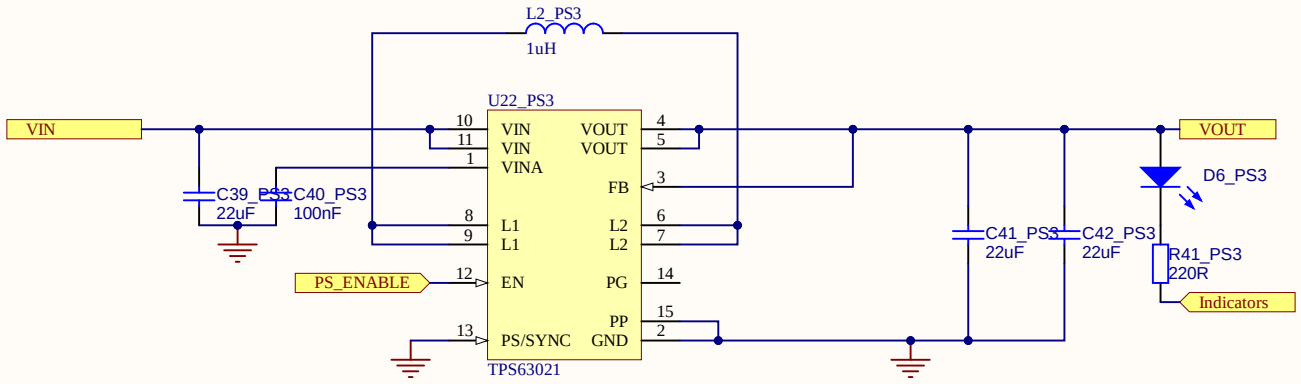

Title **TITLE**			*Flinders University* *College of Science & Engineering* *Engineering Services Room 3.22* *1284 South Rd* *SA 5042*
Size: A4	Number: A4	Drawn By: D Kleiss	
Date: 30.4.2021.	Revision: 1	Sheet 1 of 1	
File: D:\projects\lrnas\PCB_designs\Altium\megaphone-r2-nohistory\PowerSupply.SchDoc			

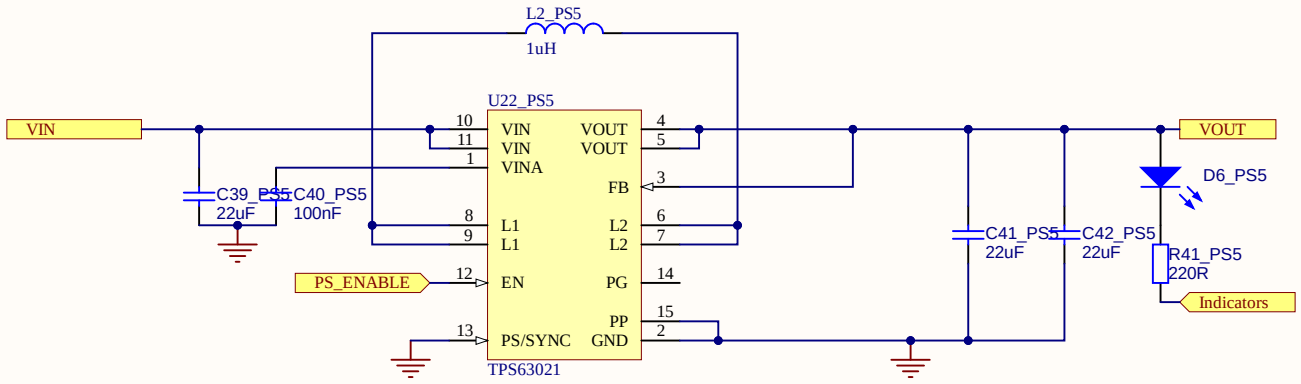

Title **TITLE**			*Flinders University* *College of Science & Engineering* *Engineering Services Room 3.22* *1284 South Rd* *SA 5042*
Size: A4	Number: A4	Drawn By: D Kleiss	
Date: 30.4.2021.	Revision: 1	Sheet 1 of 1	
File: D:\projects\lrnas\PCB_designs\Altium\megaphone-r2-nohistory\PowerSupply.SchDoc			

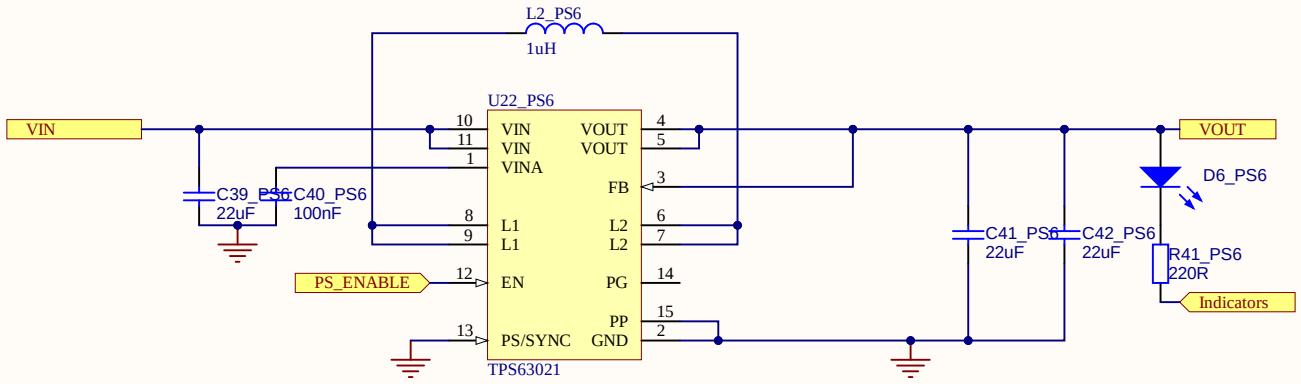

Title **TITLE**			*Flinders University* *College of Science & Engineering* *Engineering Services Room 3.22* *1284 South Rd* *SA 5042*
Size: A4	Number: A4	Drawn By: D Kleiss	
Date: 30.4.2021.	Revision: 1	Sheet 1 of 1	
File: D:\projects\lrnas\PCB_designs\Altium\megaphone-r2-nohistory\PowerSupply.SchDoc			

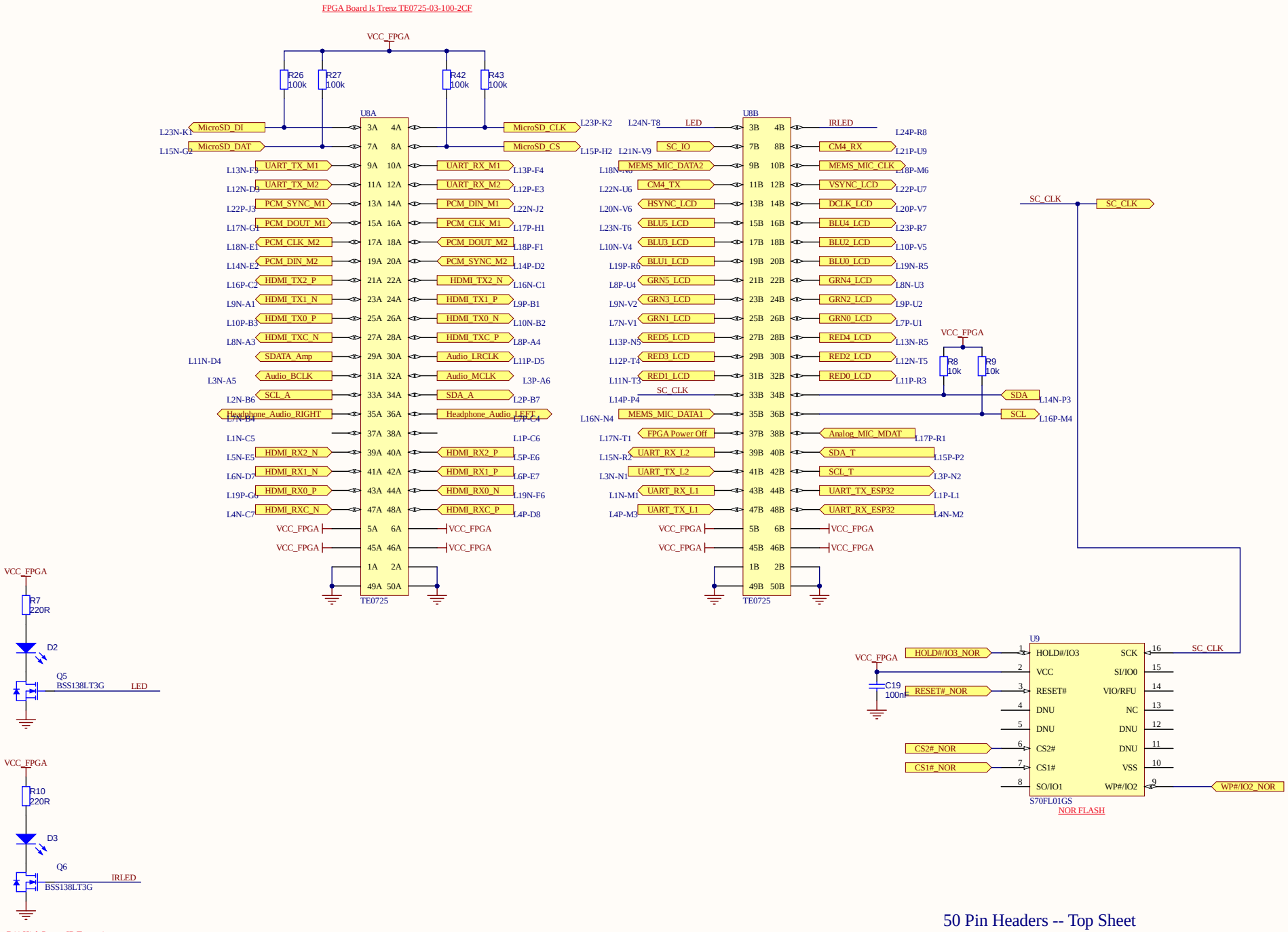

50 Pin Headers -- Top Sheet

Title	MEGAPHONE FPGA		
Size: A3	Number: *	Drawn By: *	Bedford Park SA
Date: 30.4.2021.	Revision: *	Sheet 2 of *	
File: D:\projects\lrnas\PCB_designs\Altium\megaphone-r2-nohistory\FPGA.SchDoc			

Lachlan McDonald

Cannot open file S:\CSE-CSEM esg\Electro Technical Team\Superceded\Documents\Altium\Step Models\Connectors\CUI\CUI_SJ-43515TS-SMT-TR\Mating TRRS.bmp

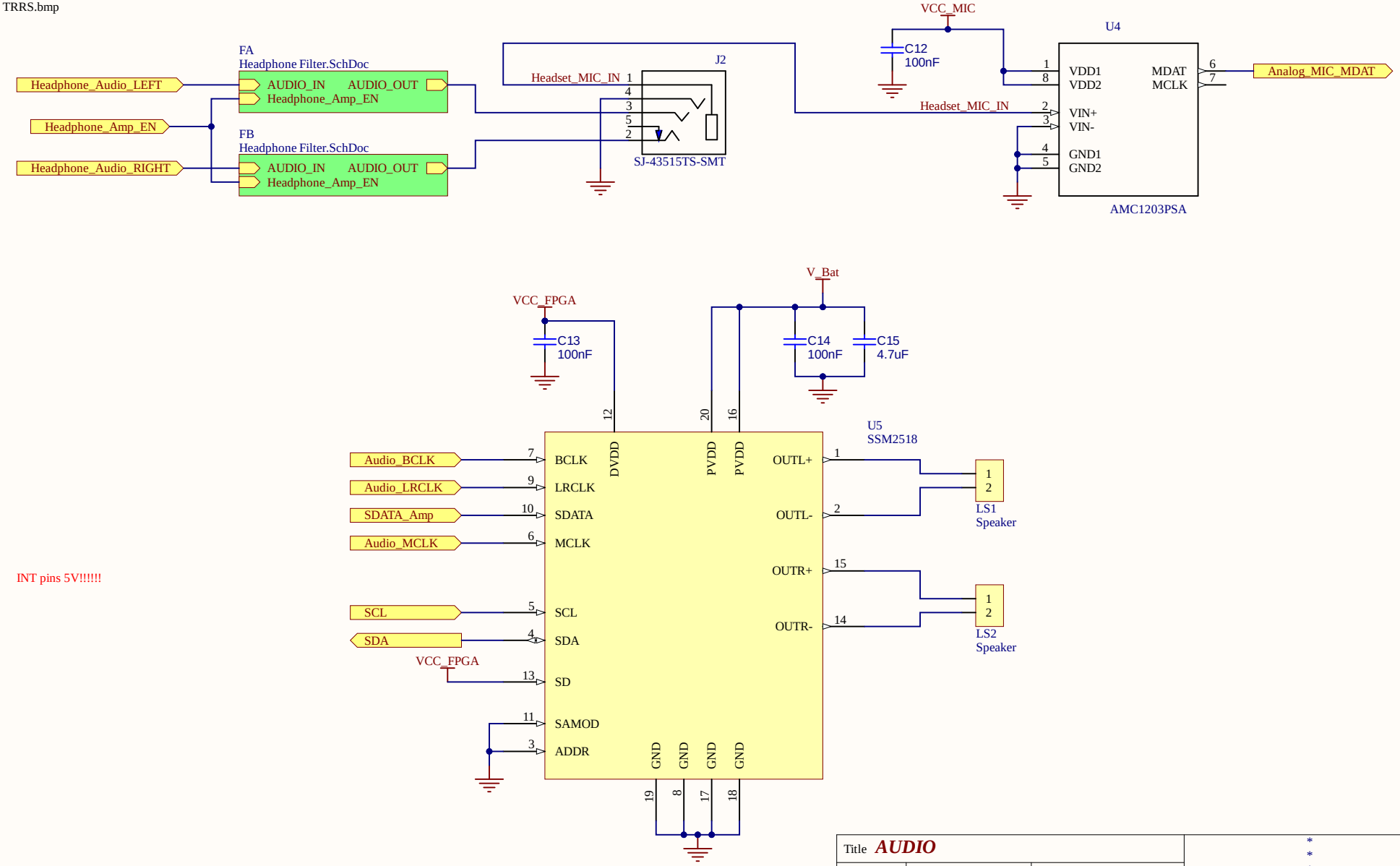

INT pins 5V!!!!!!

Title **AUDIO**			* * * * *
Size: A4	Number: *	Drawn By: D KLEISS	
Date: 30.4.2021.	Revision: 1	Sheet 3 of 15	7 17
File: D:\projects\lrnas\PCB_designs\Altium\megaphone-r2-nohistory\Audio.SchDoc			

These transistors isolate VCC_MIC from the I2C bus when the accelerometer isn't receiving power (Removed in V3)

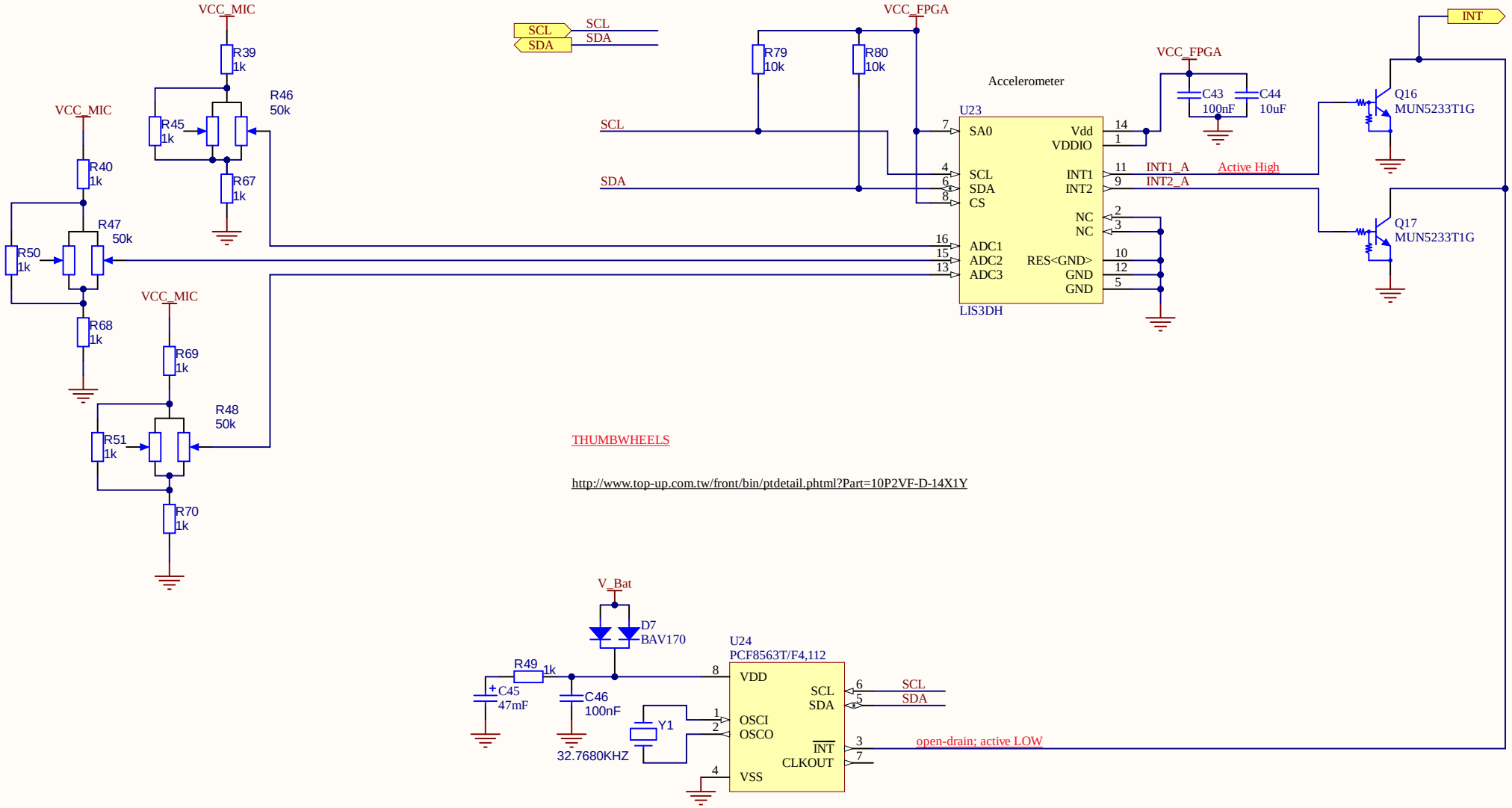

Title	**MEGAPHONE Sensors**		*Flinders University* *College of Science & Engineering* *Engineering Services Room 3.22* *1284 South Rd* *SA 5042*
Size: A4	Number: A4284	Drawn By: D Kleiss	
Date: 30.4.2021.	Revision: 1	Sheet 5 of 15	
File: D:\projects\lrnas\PCB_designs\Altium\megaphone-r2-nohistory\Sensors.SchDoc			

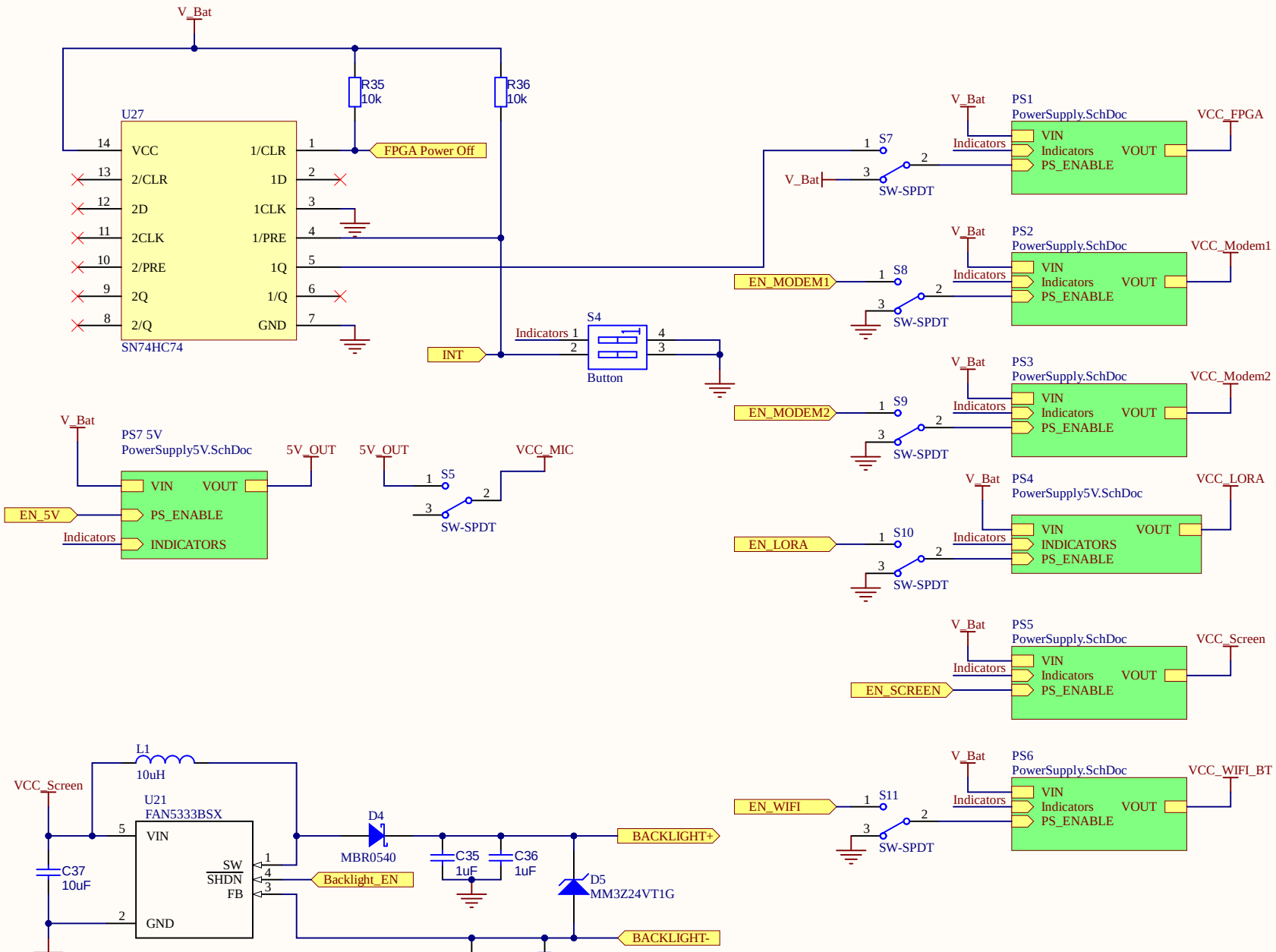

Title	***Power Control***		
Size: A4	Number: A4284	Drawn By: D KLEISS	
Date: 30.4.2021.	Revision: 1	Sheet 11 of 15	
File: D:\projects\lrnas\PCB_designs\Altium\megaphone-r2-nohistory\Power Control.SchDoc			

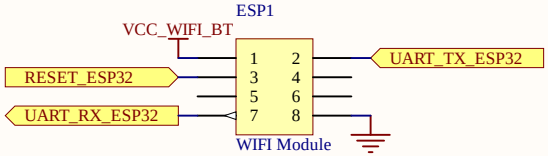

Title	***BLUETOOTH & WiFi***		* * * * *
Size: A4	Number: *	Drawn By: *	
Date: 30.4.2021.	Revision: *	Sheet * of *	9 17
File: D:\projects\lrnas\PCB_designs\Altium\megaphone-r2-nohistory\Bluetooth & WIFI.SchDoc			Lachlan McDonald

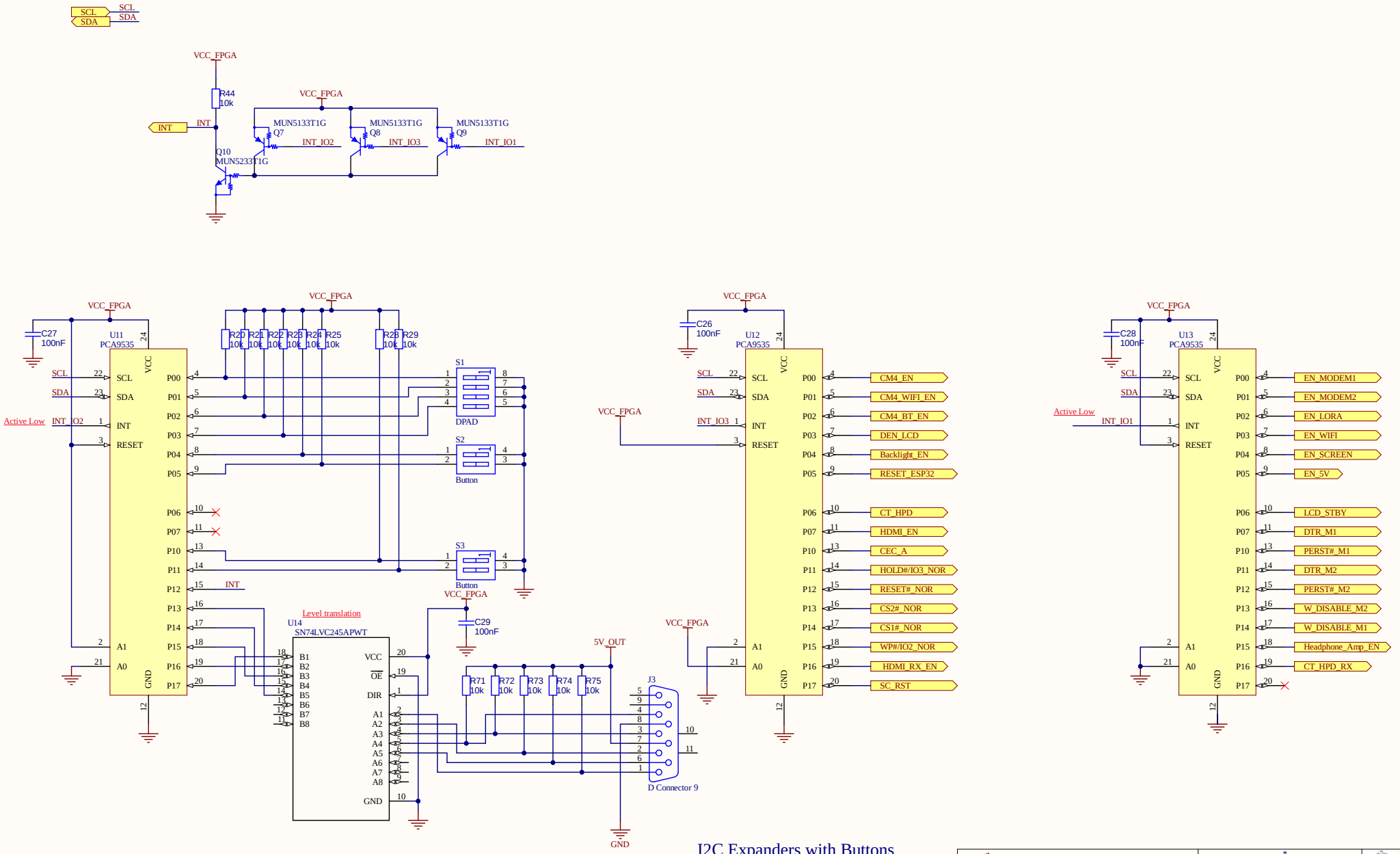

I2C Expanders with Buttons

Title *			* * * Bedford Park SA *
Size: A3	Number: *	Drawn By: *	
Date: 30.4.2021.	Revision: *	Sheet * of *	
File: D:\projects\lrnas\PCB_designs\Altium\megaphone-r2-nohistory\I2C Expanders.SchDoc			

Lachlan Mitchell

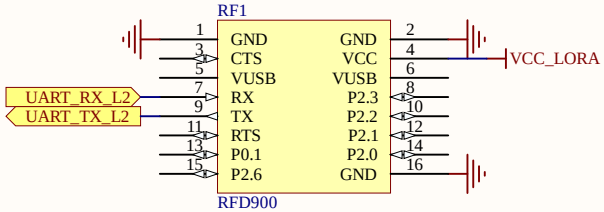

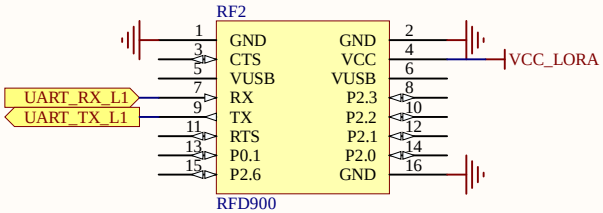

LoRa Modules

Title *			* * * * *
Size: A4	Number: *	Drawn By: *	
Date: 30.4.2021.	Revision: *	Sheet * of *	11 17
File: D:\projects\lrnas\PCB_designs\Altium\megaphone-r2-nohistory\LoRa Radio.SchDoc			Lachlan McDonald

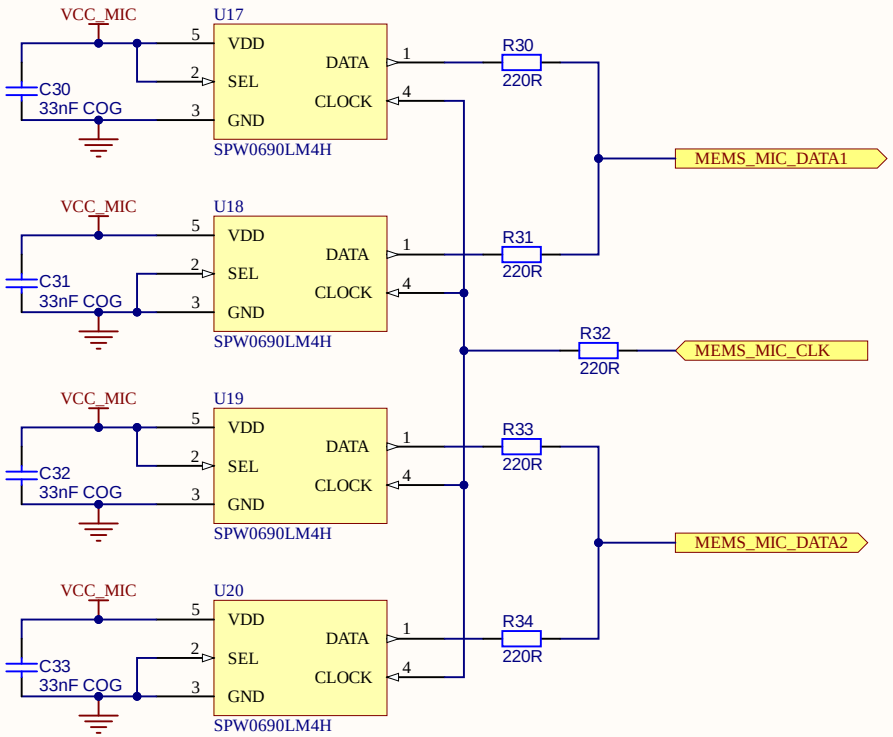

Title *			* * * * *
Size: A4	Number: *	Drawn By: *	
Date: 30.4.2021.	Revision: *	Sheet * of *	16 17
File: D:\projects\lrnas\PCB_designs\Altium\megaphone-r2-nohistory\MEMS MICs.SchDoc			Lachlan McDonald

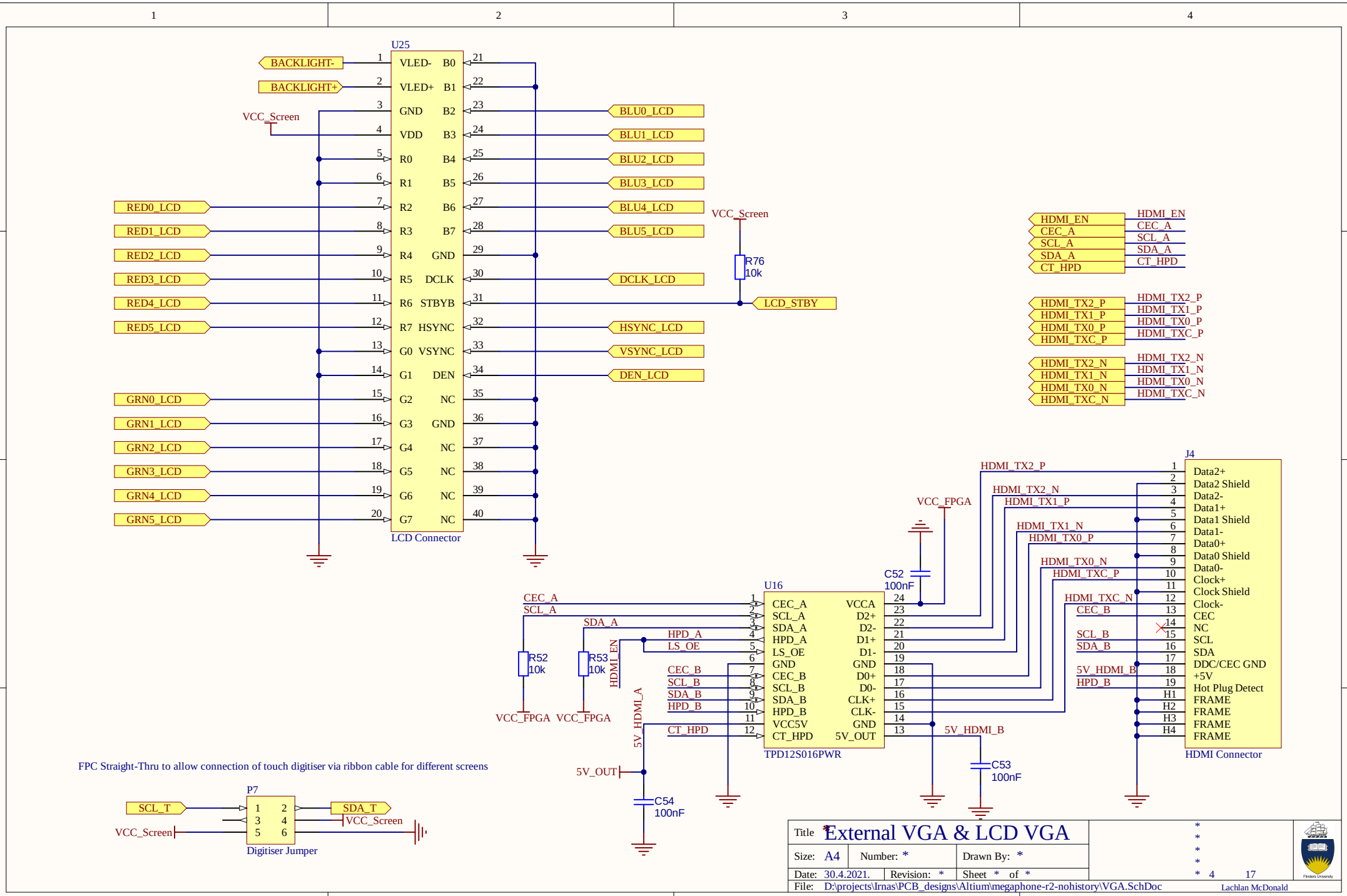
U25
BACKLIGHT-
BACKLIGHT+
VCC_Screen
VLED- B0
VLED+ B1
GND B2
VDD B3
R0 B4
R1 B5
R2 B6
R3 B7
R4 GND
R5 DCLK
R6 STBYB
R7 HSYNC
G0 VSYNC
G1 DEN
G2 NC
G3 GND
G4 NC
G5 NC
G6 NC
G7 NC
BLU0_LCD
BLU1_LCD
BLU2_LCD
BLU3_LCD
BLU4_LCD
BLU5_LCD
DCLK_LCD
LCD_STBY
HSYNC_LCD
VSYNC_LCD
DEN_LCD
RED0_LCD
RED1_LCD
RED2_LCD
RED3_LCD
RED4_LCD
RED5_LCD
GRN0_LCD
GRN1_LCD
GRN2_LCD
GRN3_LCD
GRN4_LCD
GRN5_LCD
LCD Connector
R76
10k
HDMI_EN
CEC_A
SCL_A
SDA_A
CT_HPD
HDMI_TX2_P
HDMI_TX1_P
HDMI_TX0_P
HDMI_TXC_P
HDMI_TX2_N
HDMI_TX1_N
HDMI_TX0_N
HDMI_TXC_N
J4
Data2+
Data2 Shield
Data2-
Data1+
Data1 Shield
Data1-
Data0+
Data0 Shield
Data0-
Clock+
Clock Shield
Clock-
CEC
NC
SCL
SDA
DDC/CEC GND
+5V
Hot Plug Detect
FRAME
HDMI Connector
VCC_FPGA
C52
100nF
U16
VCCA
D2+
D2-
D1+
D1-
GND
D0+
D0-
CLK+
CLK-
GND
5V_OUT
VCC5V
CT_HPD
TPD12S016PWR
LS_OE
R52
10k
R53
10k
5V_HDMI_A
5V_HDMI_B
C53
100nF
C54
100nF
5V_OUT
FPC Straight-Thru to allow connection of touch digitiser via ribbon cable for different screens
P7
SCL_T
SDA_T
Digitiser Jumper
Title External VGA & LCD VGA
Size: A4
Number: *
Drawn By: *
Date: 30.4.2021.
Revision: *
Sheet * of *
File: D:\projects\lrnas\PCB_designs\Altium\megaphone-r2-nohistory\VGA.SchDoc
4 17
Lachlan McDonald

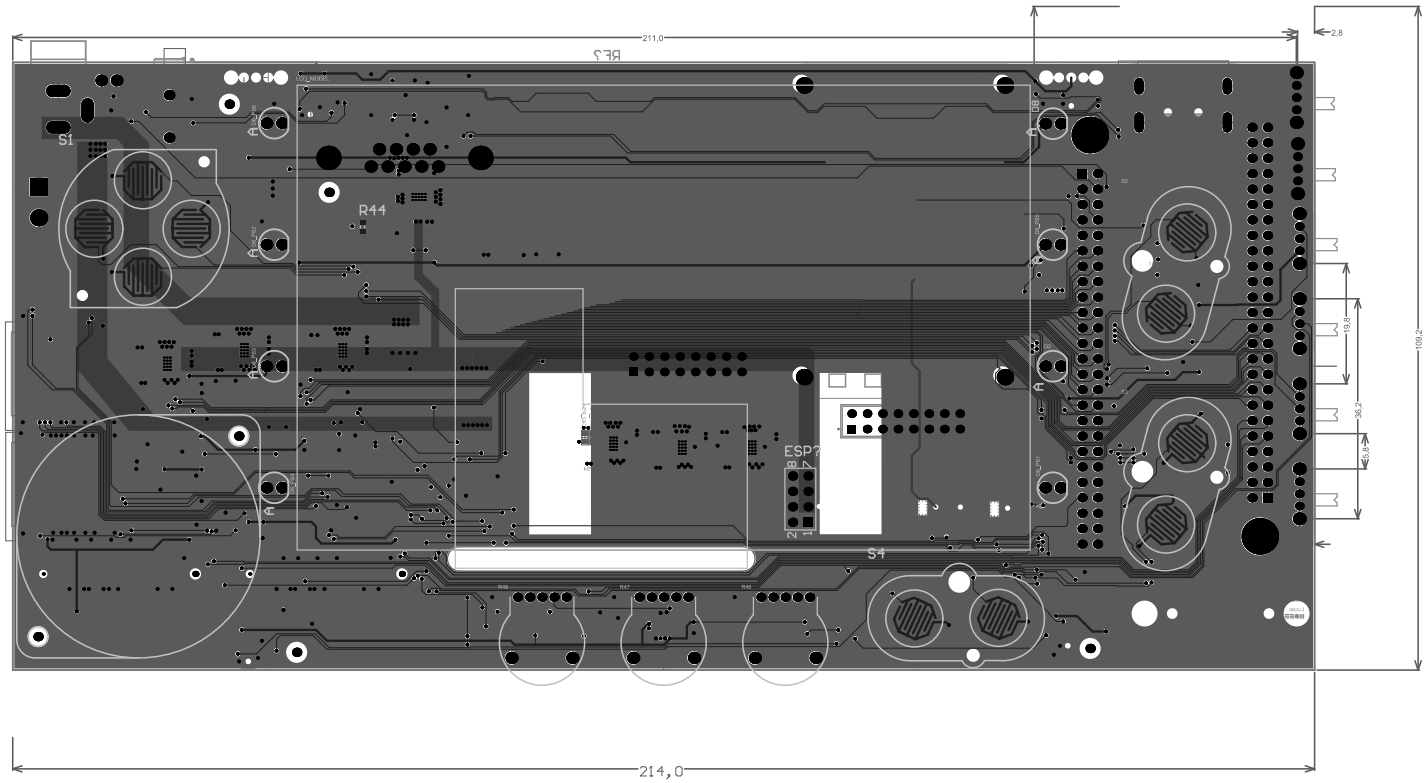
211,0
2,8
109,2
19,8
38,2
5,0
214,0
S1
R44
ESP7
S4

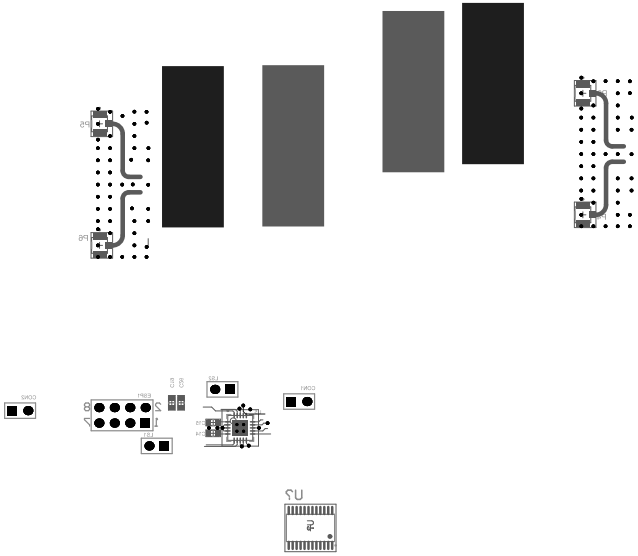
MEGA65
MEGA65
U7