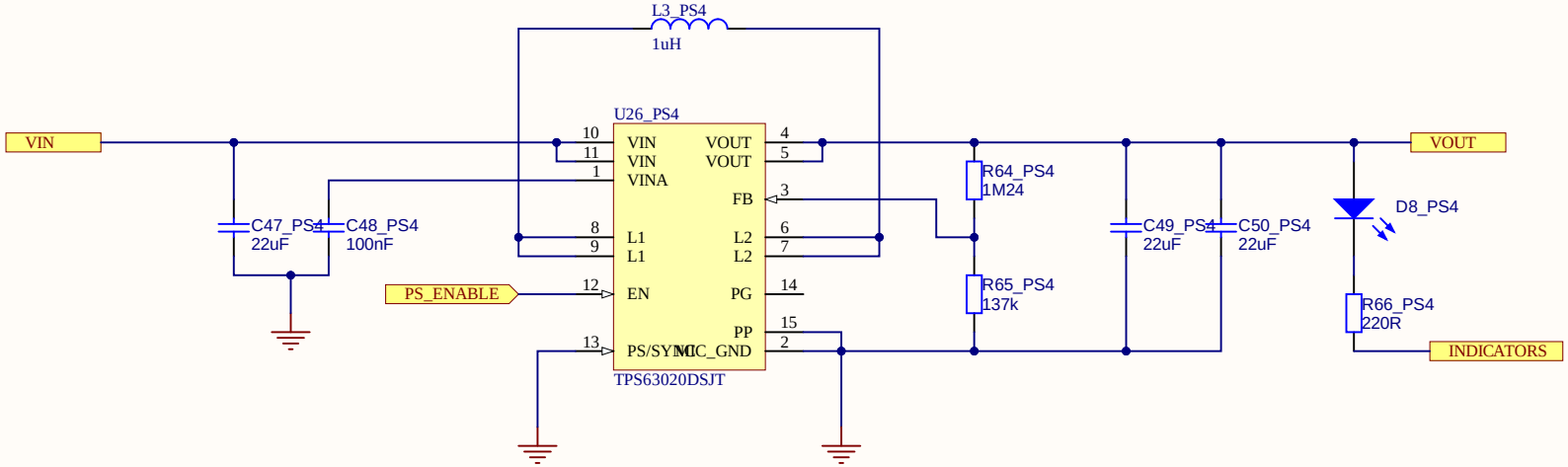

Title		
Size A4	Number	Revision
Date: 6.04.2021		Sheet of
File: D:\projects\..\PowerSupply5V.SchDoc		Drawn By:

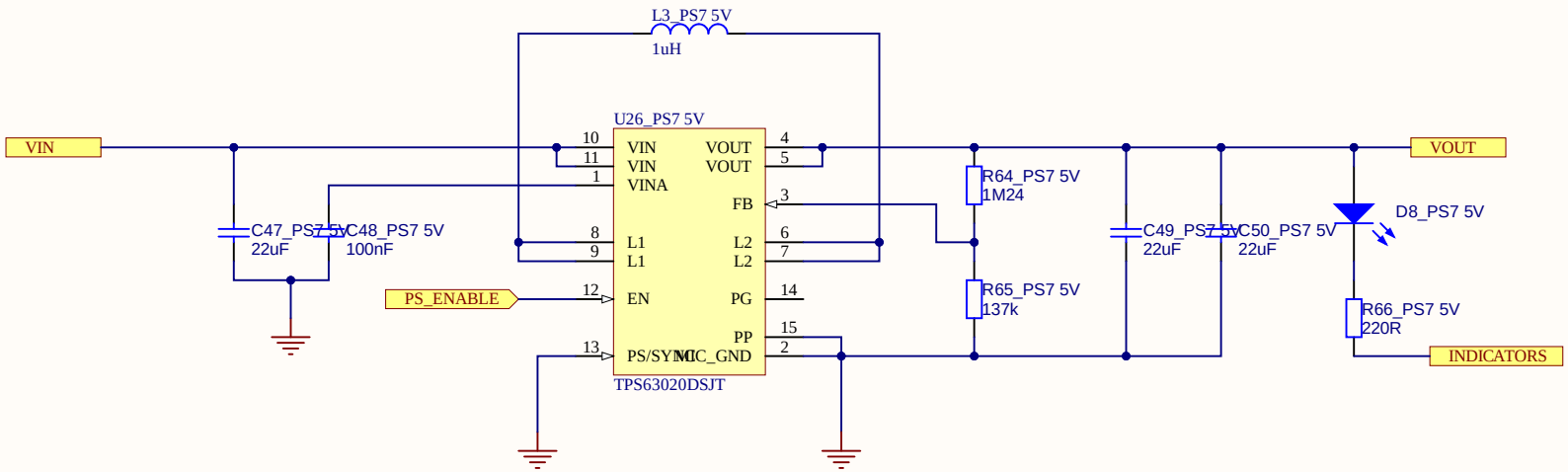

Title		
Size A4	Number	Revision
Date: 6.04.2021		Sheet of
File: D:\projects\..\PowerSupply5V.SchDoc		Drawn By:

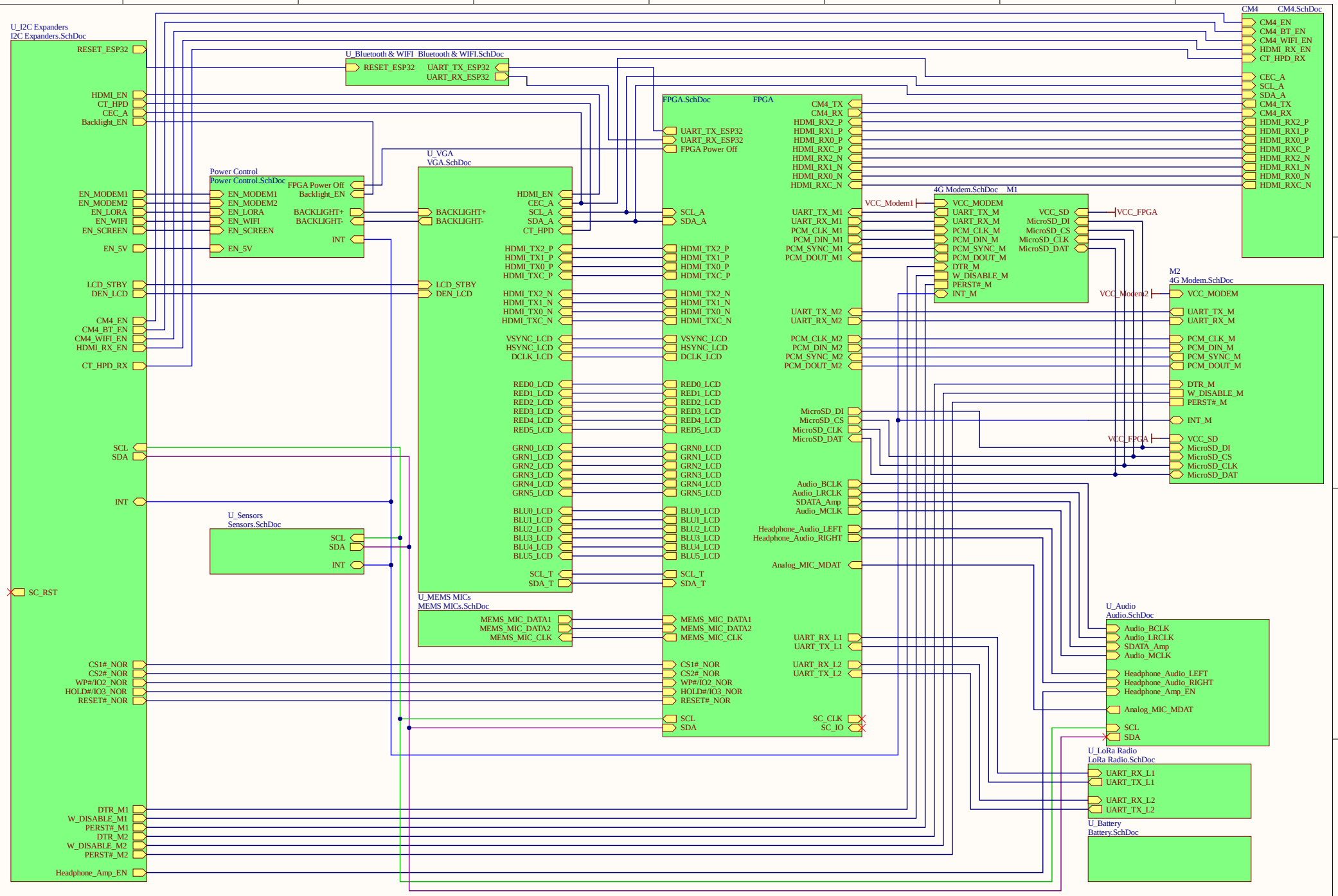

Title	*Mega Phone*		*Flinders University College of Science & Engineering Engineering Services Room 3.22 Bedford Park SA SA 5042*
Size: A3	Number: A4284	Drawn By: D Kleiss	
Date: 4.6.2021.	Revision: 1	Sheet 1 of 1	
File: D:\projects\lrnas\PCB_designs\Altium\megaphone-r2-nohistory\MEGAphone Overview.SchDoc			

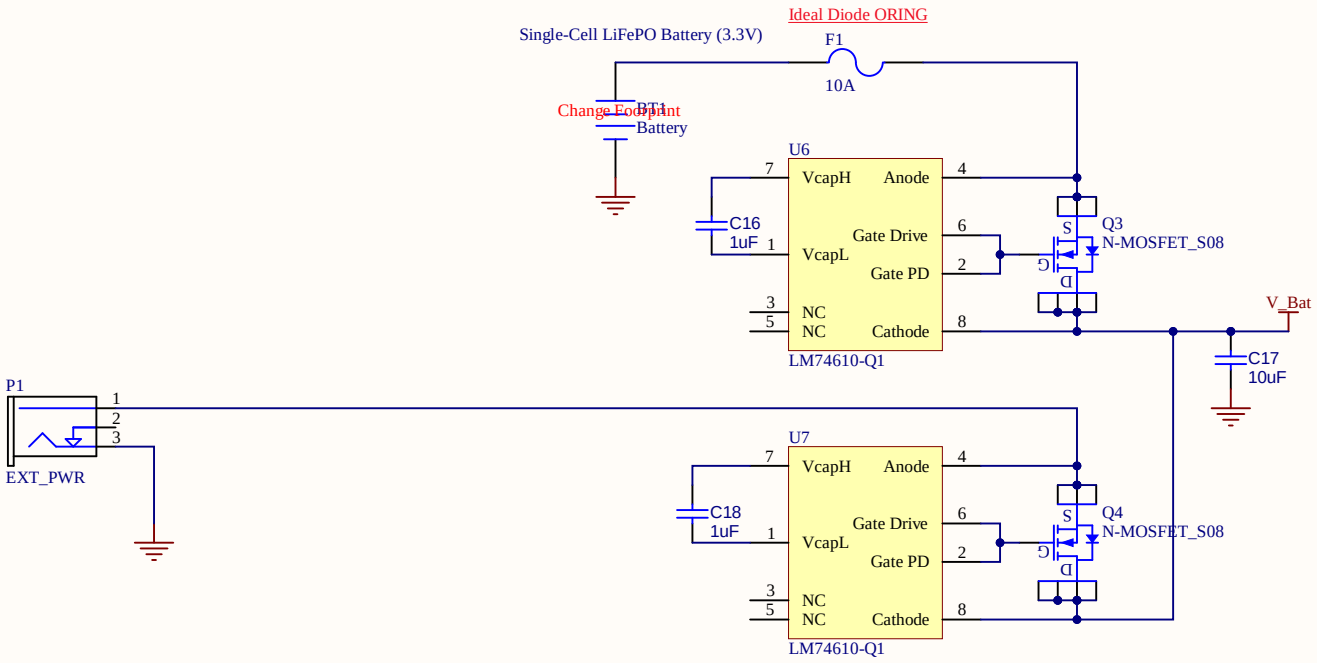

Title **TITLE**			*Flinders University* *College of Science & Engineering* *Engineering Services Room 3.22* *1284 South Rd* *SA 5042*
Size: A4	Number: A4	Drawn By: D Kleiss	
Date: 4.6.2021.	Revision: 1	Sheet 1 of 1	
File: D:\projects\lrnas\PCB_designs\Altium\megaphone-r2-nohistory\Battery.SchDoc			

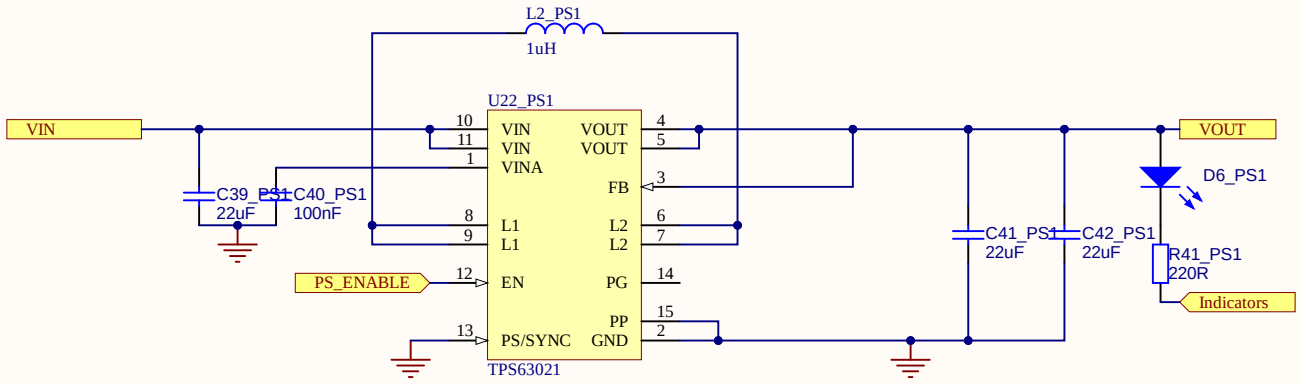

Title **TITLE**			Flinders University College of Science & Engineering Engineering Services Room 3.22 1284 South Rd SA 5042
Size: A4	Number: A4	Drawn By: D Kleiss	
Date: 4.6.2021.	Revision: 1	Sheet 1 of 1	
File: D:\projects\lrnas\PCB_designs\Altium\megaphone-r2-nohistory\PowerSupply.SchDoc			

Sallen-Key Butterworth Low Pass 4th Order Filter

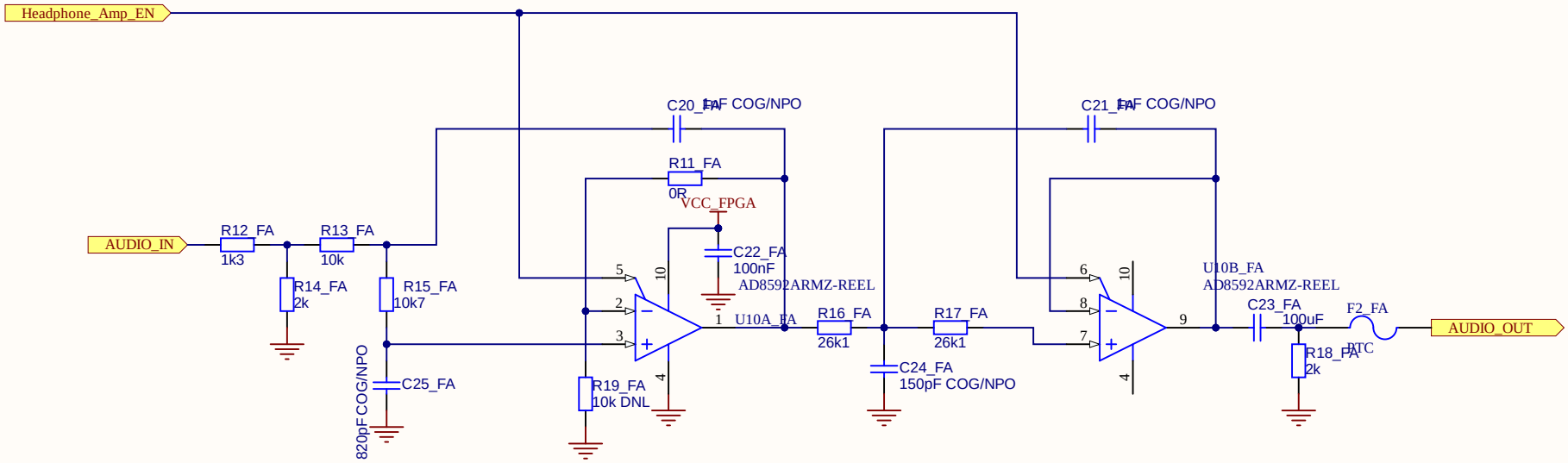

Title **TITLE**			*Flinders University* *College of Science & Engineering* *Engineering Services Room 3.22* *1284 South Rd* *SA 5042*
Size: A4	Number: A4	Drawn By: D Kleiss	
Date: 4.6.2021.	Revision: 1	Sheet 1 of 1	
File: D:\projects\lrnas\PCB_designs\Altium\megaphone-r2-nohistory\Headphone Filter.SchDoc			

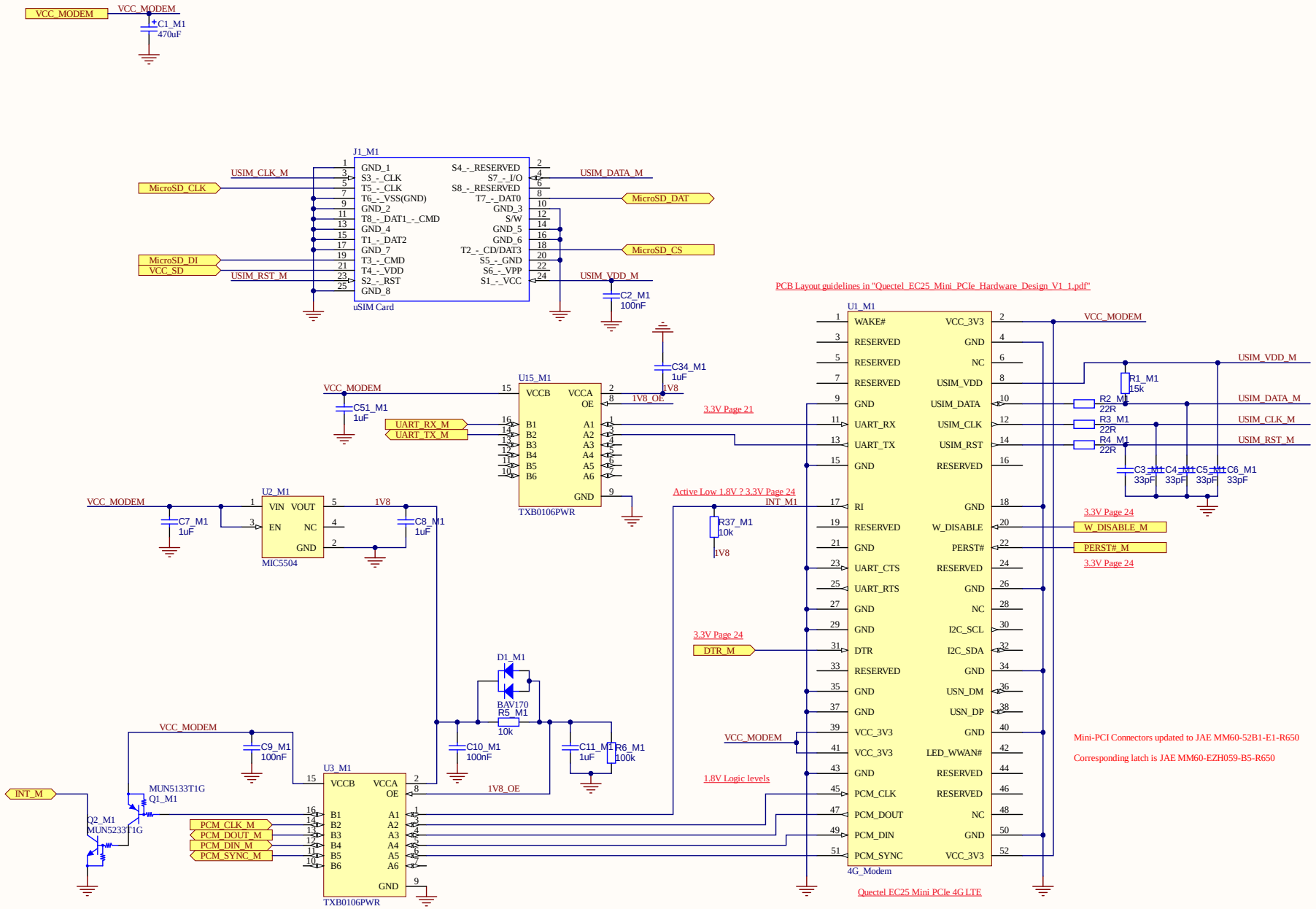

Title	TITLE		Flinders University College of Science & Engineering Engineering Services Room 3.22 Bedford Park SA SA 5042
Size: A3	Number: A4	Drawn By: D Kleiss	
Date: 4.6.2021.	Revision: 1	Sheet 1 of 1	
File: D:\projects\lrnas\PCB_designs\Altium\megaphone-r2-nohistory\4G Modem.SchDoc			

6 17 Lachlan McDonald

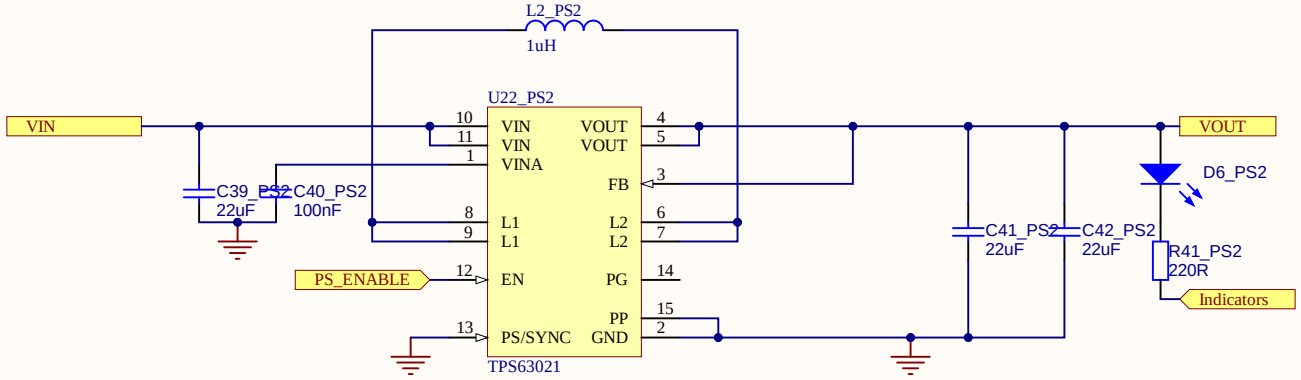

Title **TITLE**			*Flinders University* *College of Science & Engineering* *Engineering Services Room 3.22* *1284 South Rd* *SA 5042*
Size: A4	Number: A4	Drawn By: D Kleiss	
Date: 4.6.2021.	Revision: 1	Sheet 1 of 1	
File: D:\projects\lrnas\PCB_designs\Altium\megaphone-r2-nohistory\PowerSupply.SchDoc			

Sallen-Key Butterworth Low Pass 4th Order Filter

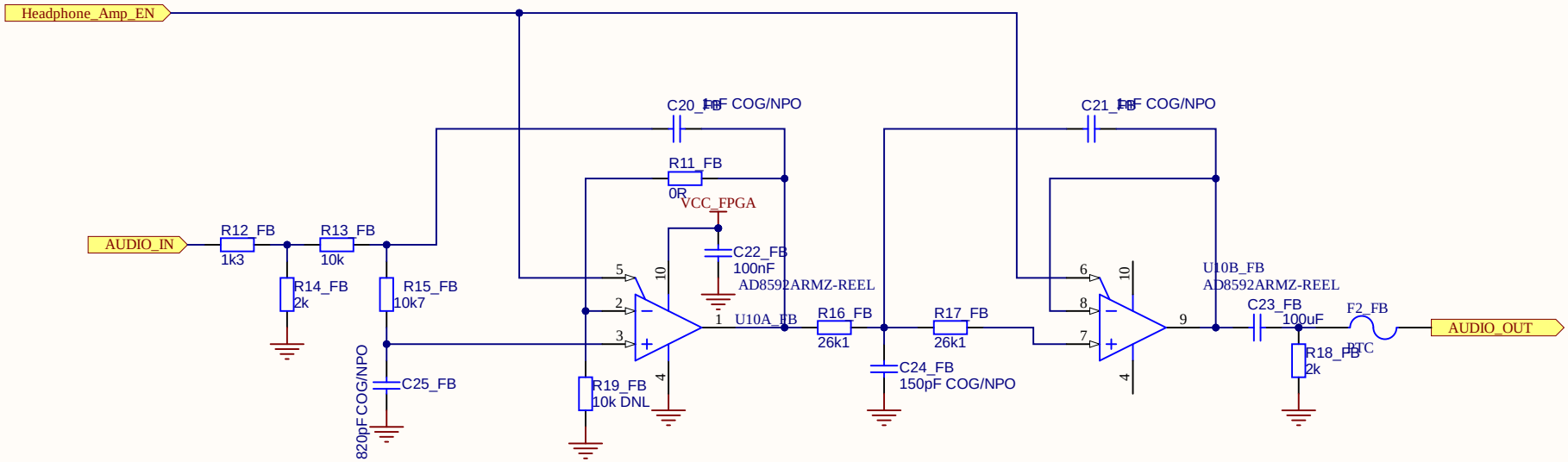

Title	TITLE		Flinders University College of Science & Engineering Engineering Services Room 3.22 1284 South Rd SA 5042
Size: A4	Number: A4	Drawn By: D Kleiss	
Date: 4.6.2021.	Revision: 1	Sheet 1 of 1	
File: D:\projects\lrnas\PCB_designs\Altium\megaphone-r2-nohistory\Headphone Filter.SchDoc			

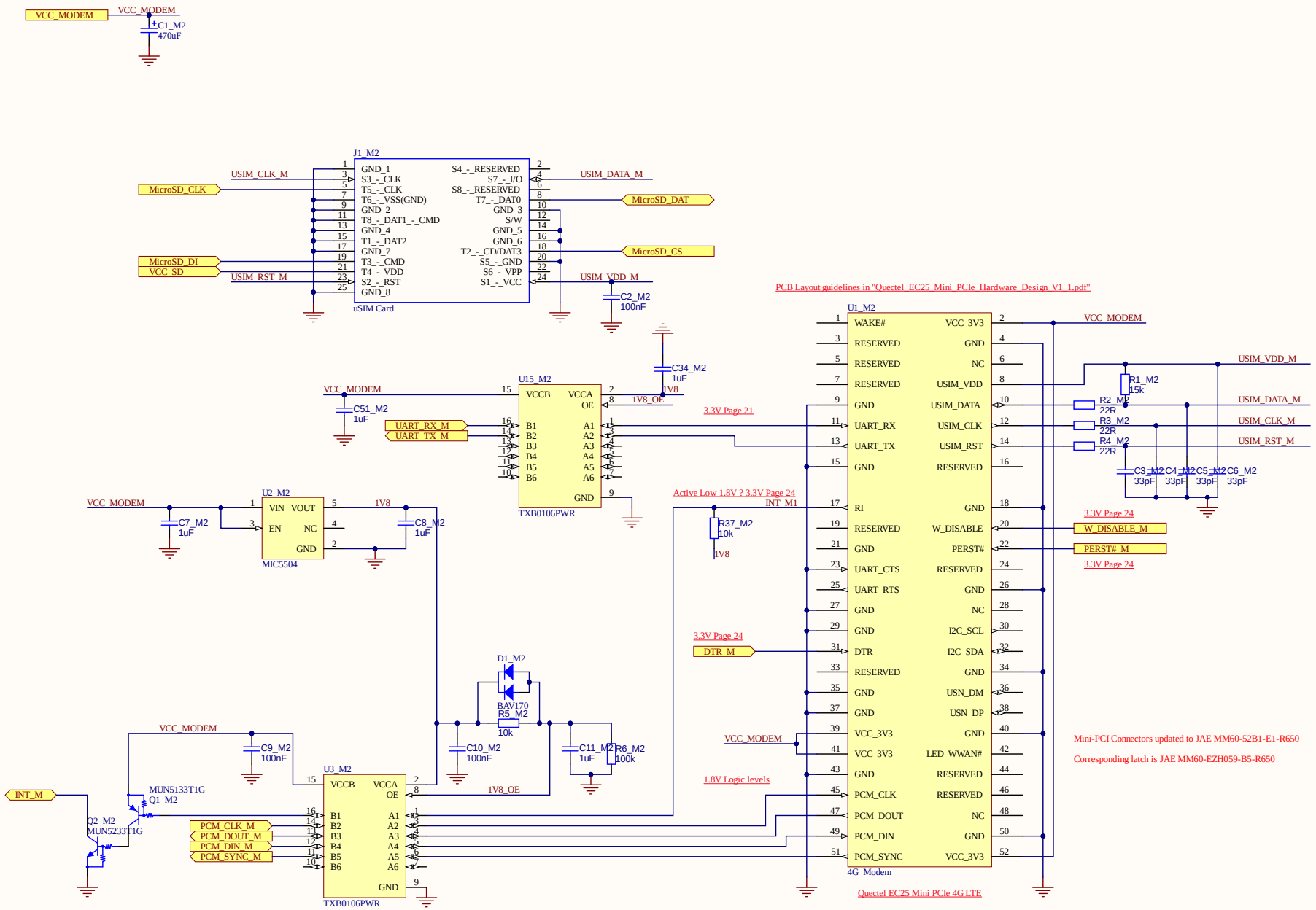

Title	TITLE		Flinders University College of Science & Engineering Engineering Services Room 3.22 Bedford Park SA SA 5042
Size: A3	Number: A4	Drawn By: D Kleiss	
Date: 4.6.2021.	Revision: 1	Sheet 1 of 1	
File: D:\projects\lrnas\PCB_designs\Altium\megaphone-r2-nohistory\4G Modem.SchDoc			

6 17 Lachlan McDonald

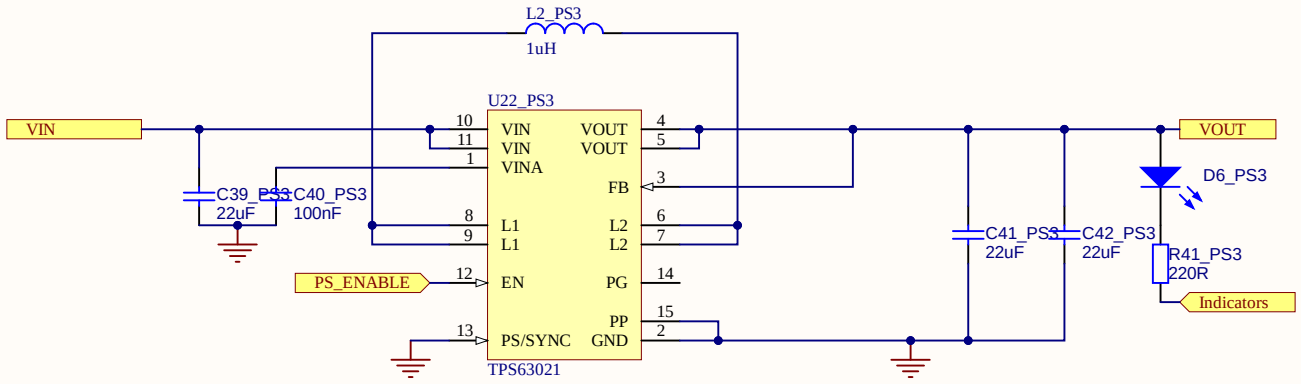

Title **TITLE**			*Flinders University* *College of Science & Engineering* *Engineering Services Room 3.22* *1284 South Rd* *SA 5042*
Size: A4	Number: A4	Drawn By: D Kleiss	
Date: 4.6.2021.	Revision: 1	Sheet 1 of 1	
File: D:\projects\lrnas\PCB_designs\Altium\megaphone-r2-nohistory\PowerSupply.SchDoc			

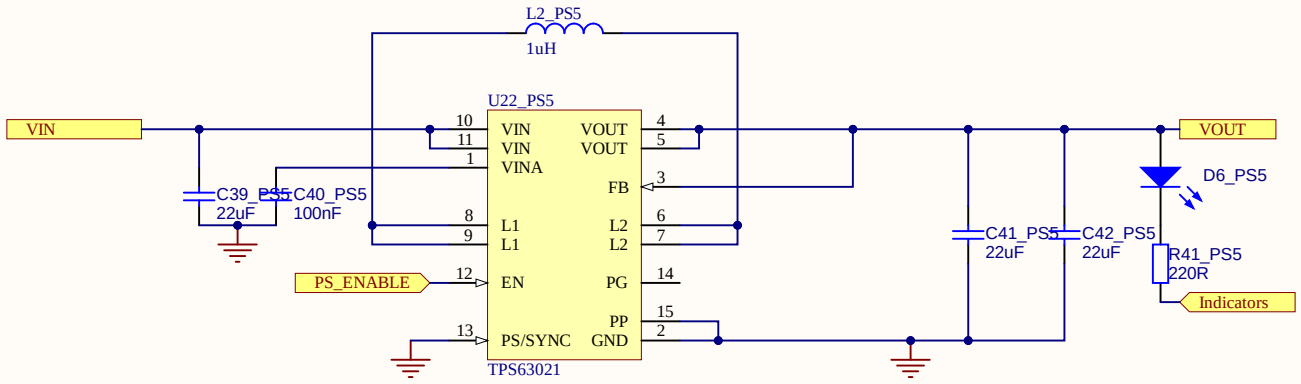

Title **TITLE**			*Flinders University* *College of Science & Engineering* *Engineering Services Room 3.22* *1284 South Rd* *SA 5042*
Size: A4	Number: A4	Drawn By: D Kleiss	
Date: 4.6.2021.	Revision: 1	Sheet 1 of 1	
File: D:\projects\lrnas\PCB_designs\Altium\megaphone-r2-nohistory\PowerSupply.SchDoc			

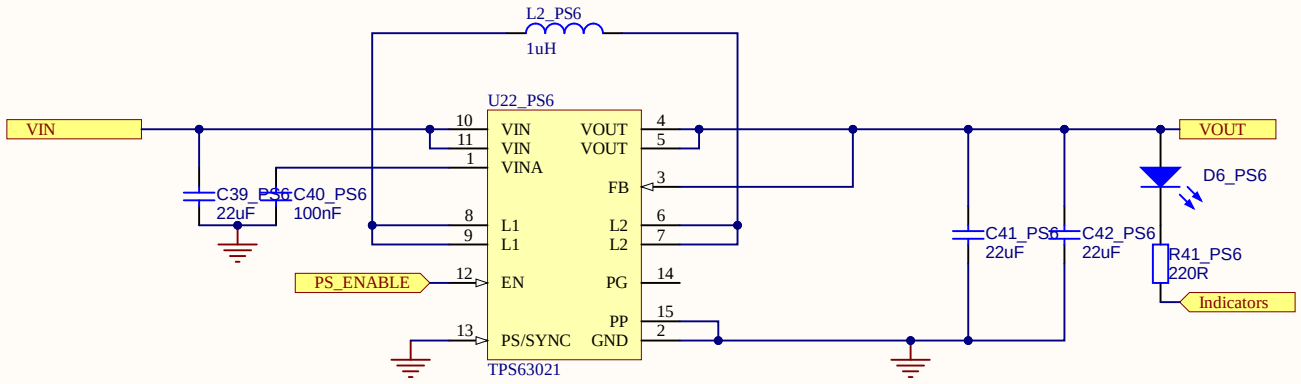

Title **TITLE**			*Flinders University* *College of Science & Engineering* *Engineering Services Room 3.22* *1284 South Rd* *SA 5042*
Size: A4	Number: A4	Drawn By: D Kleiss	
Date: 4.6.2021.	Revision: 1	Sheet 1 of 1	
File: D:\projects\lrnas\PCB_designs\Altium\megaphone-r2-nohistory\PowerSupply.SchDoc			

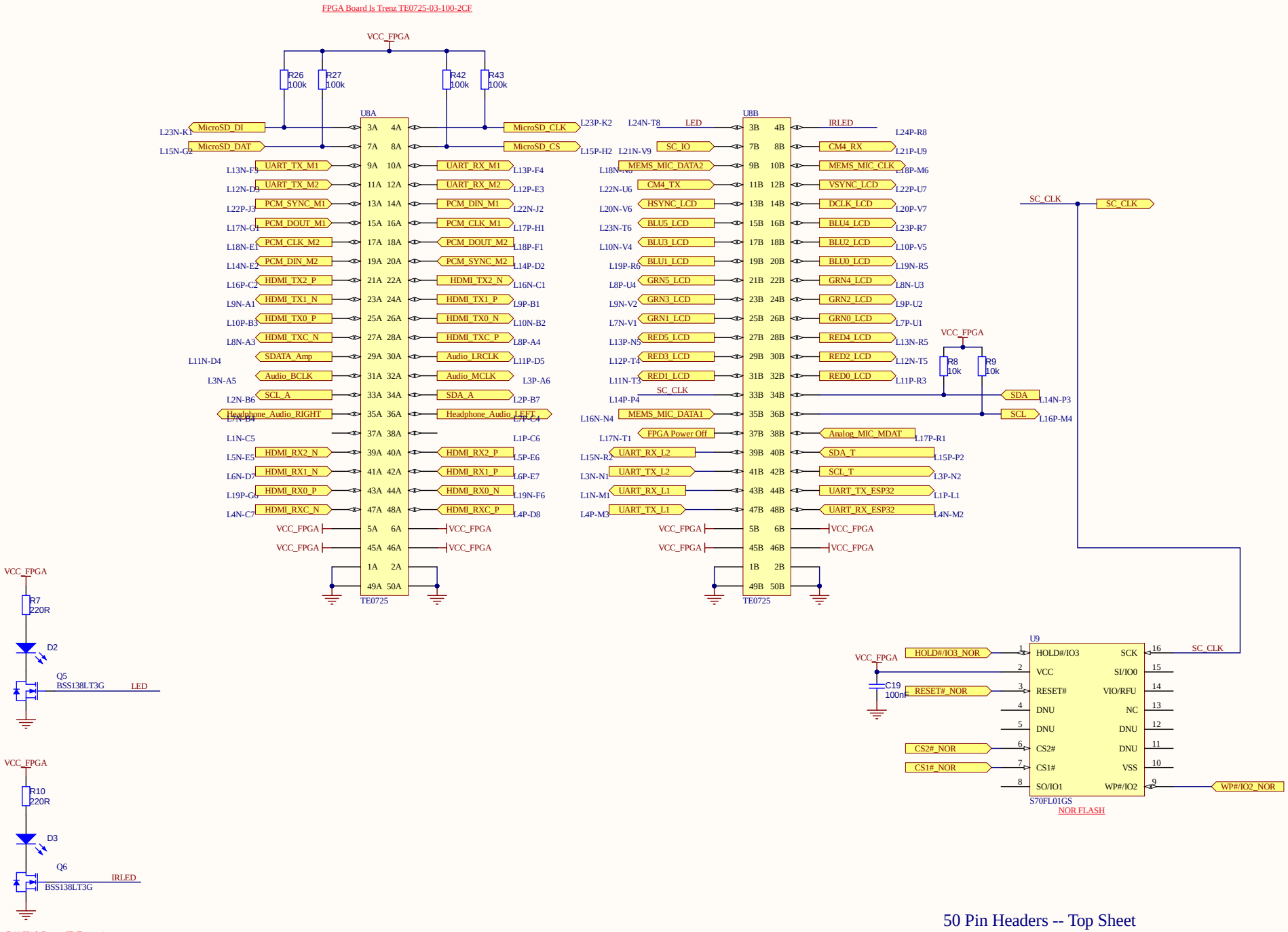

50 Pin Headers -- Top Sheet

Title	MEGAPHONE FPGA		
Size: A3	Number: *	Drawn By: *	Bedford Park SA
Date: 4.6.2021.	Revision: *	Sheet 2 of *	
File: D:\projects\lrnas\PCB_designs\Altium\megaphone-r2-nohistory\FPGA.SchDoc			

Lachlan McDonald

Cannot open file S:\CSE-CSEM esg\Electro Technical Team\Superceded\Documents\Altium\Step Models\Connectors\CUI\CUI_SJ-43515TS-SMT-TR\Mating TRRS.bmp

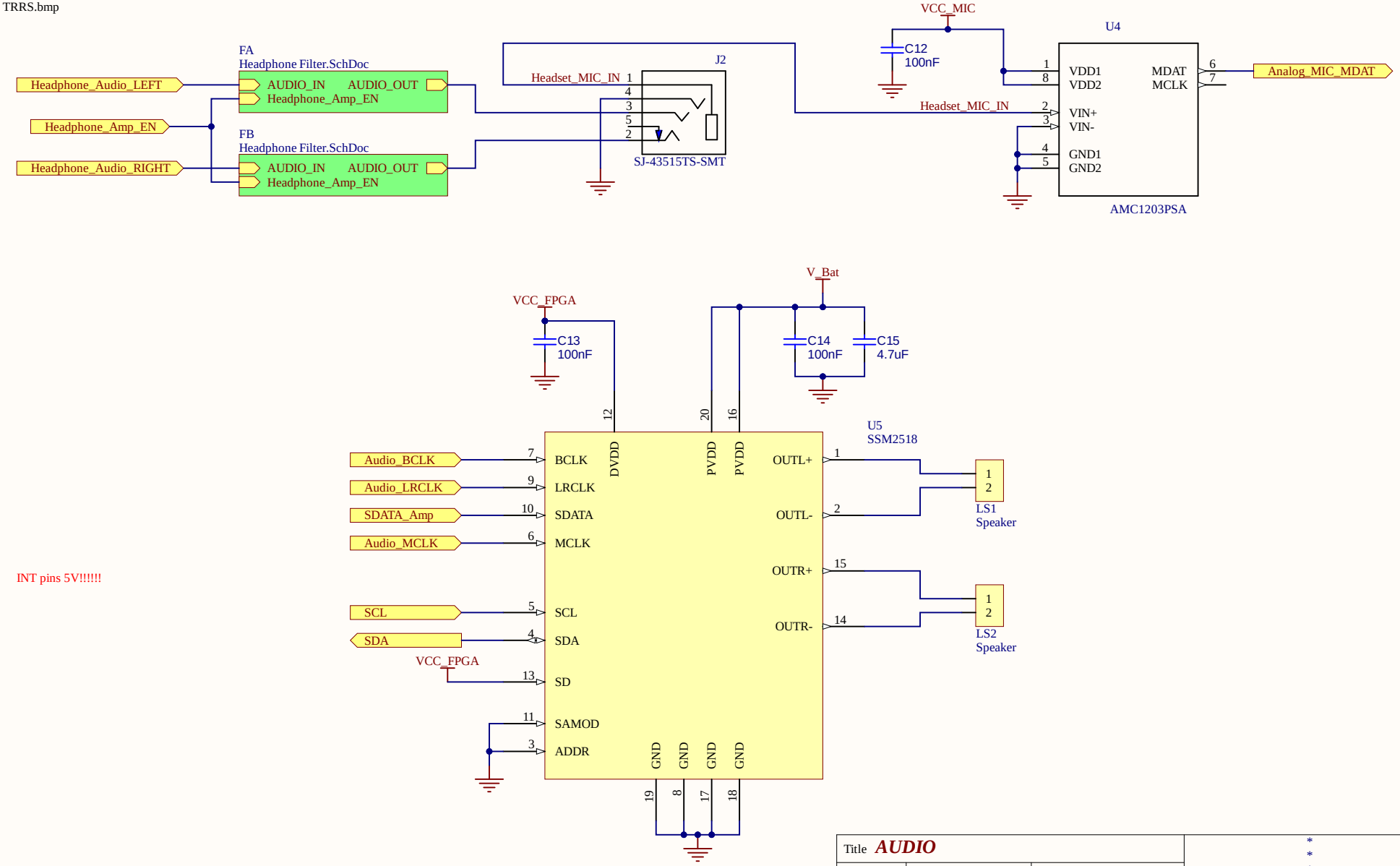

INT pins 5V!!!!!!

Title **AUDIO**			
Size: A4	Number: *	Drawn By: D KLEISS	
Date: 4.6.2021.	Revision: 1	Sheet 3 of 15	
File: D:\projects\lrnas\PCB_designs\Altium\megaphone-r2-nohistory\Audio.SchDoc			

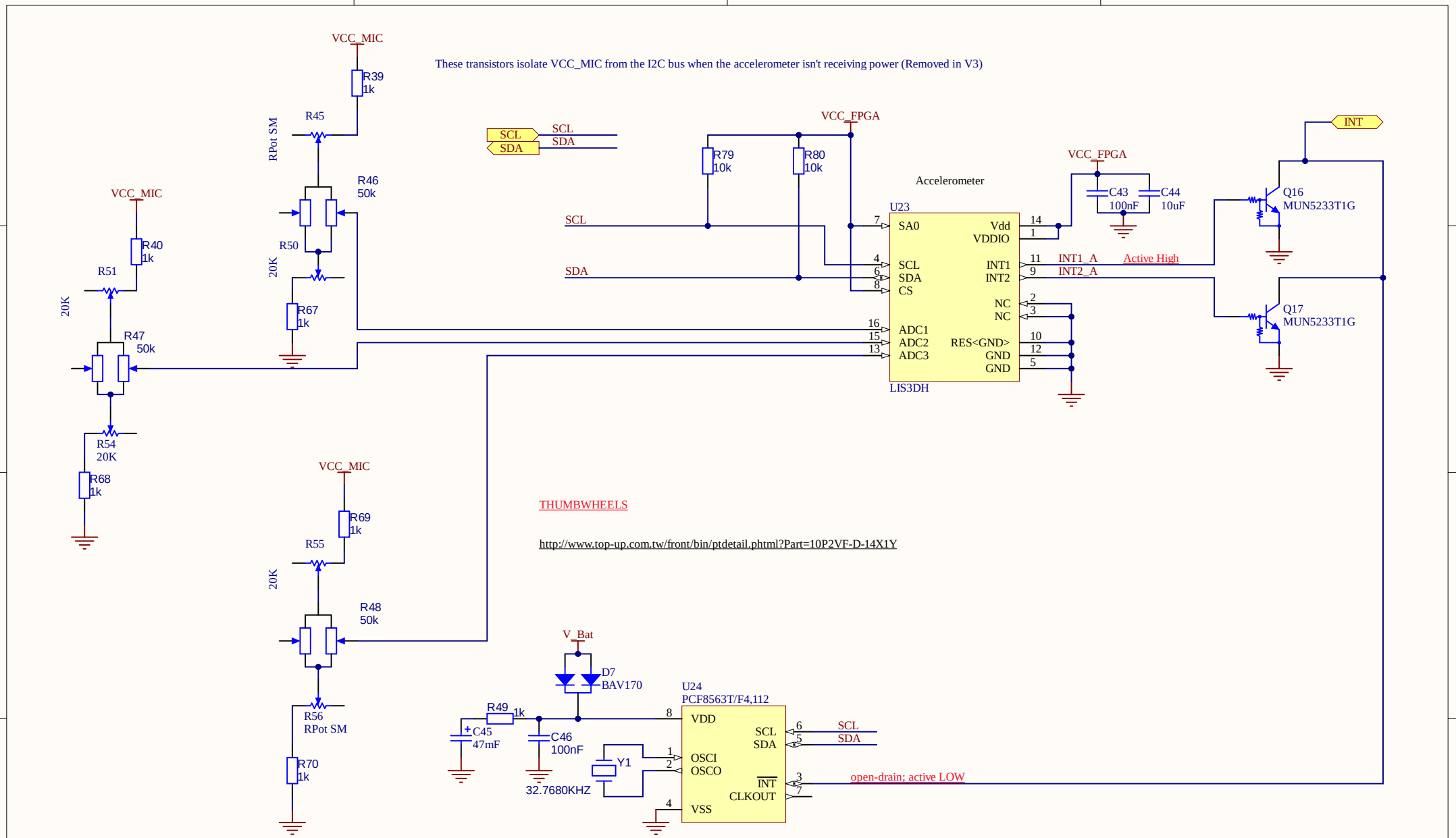

Title	**MEGAPHONE Sensors**		*Flinders University* *College of Science & Engineering* *Engineering Services Room 3.22* *1284 South Rd* *SA 5042*
Size: A4	Number: A4284	Drawn By: D Kleiss	
Date: 4.6.2021.	Revision: 1	Sheet 5 of 15	
File: D:\projects\lrnas\PCB_designs\Altium\megaphone-r2-nohistory\Sensors.SchDoc			

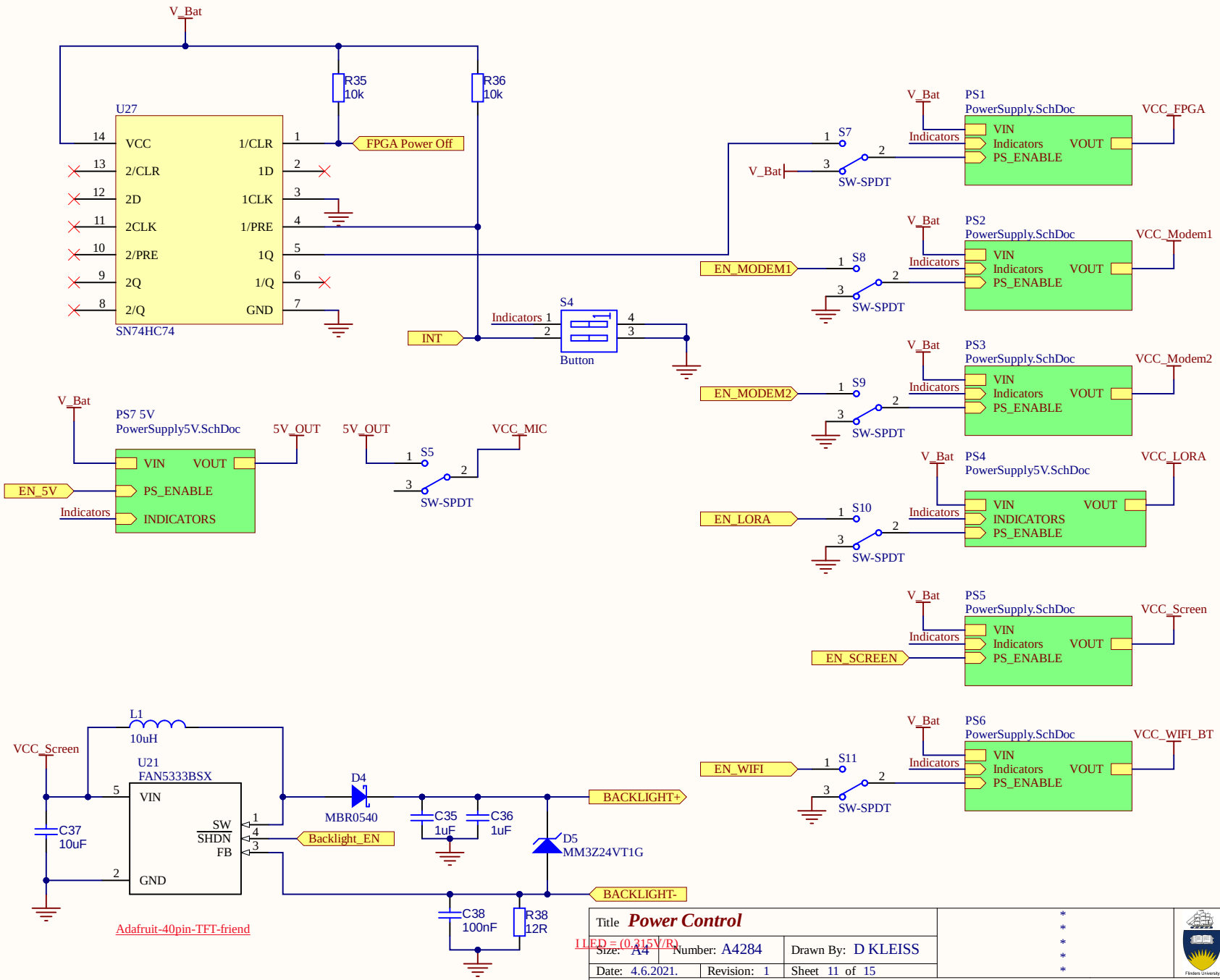
V_Bat
R35
10k
R36
10k
U27
SN74HC74
VCC
2/CLR
2D
2CLK
2/PRE
2Q
2/Q
1/CLR
1D
1CLK
1/PRE
1Q
1/Q
GND
FPGA Power Off
INT
Indicators
S4
Button
PS1
PowerSupply.SchDoc
VIN
Indicators
PS_ENABLE
VOUT
VCC_FPGA
S7
SW-SPDT
PS2
VCC_Modem1
EN_MODEM1
S8
PS3
VCC_Modem2
EN_MODEM2
S9
PS4
VCC_LORA
EN_LORA
S10
PS5
VCC_Screen
EN_SCREEN
PS6
VCC_WIFI_BT
EN_WIFI
S11
PS7 5V
PowerSupply5V.SchDoc
5V_OUT
EN_5V
INDICATORS
S5
VCC_MIC
L1
10uH
VCC_Screen
U21
FAN5333BSX
VIN
SW
SHDN
FB
GND
C37
10uF
D4
MBR0540
C35
1uF
C36
1uF
Backlight_EN
BACKLIGHT+
D5
MM3Z24VT1G
BACKLIGHT-
C38
100nF
R38
12R
Adafruit-40pin-TFT-friend
1 LED = (0.215V/R)
Title
Power Control
Size: A4
Number: A4284
Drawn By: D KLEISS
Date: 4.6.2021.
Revision: 1
Sheet 11 of 15
File: D:\projects\lrnas\PCB_designs\Altium\megaphone-r2-nohistory\Power Control.SchDoc

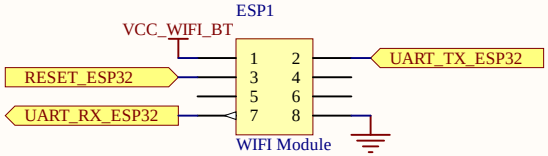

Title	***BLUETOOTH & WiFi***		* * * * *
Size: A4	Number: *	Drawn By: *	
Date: 4.6.2021.	Revision: *	Sheet * of *	9 17
File: D:\projects\lrnas\PCB_designs\Altium\megaphone-r2-nohistory\Bluetooth & WIFI.SchDoc			Lachlan McDonald

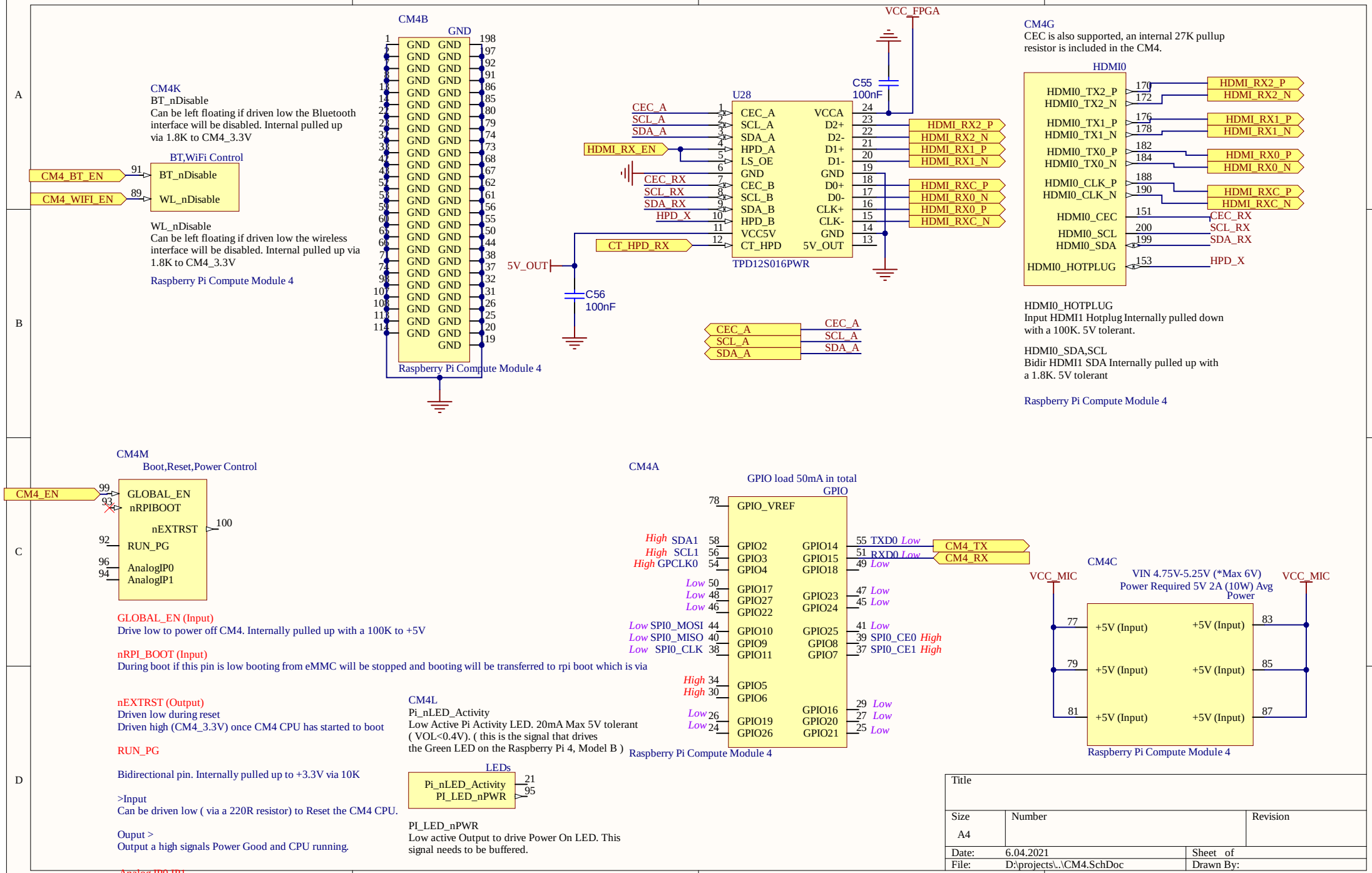
CM4B
GND
Raspberry Pi Compute Module 4
CM4K
BT_nDisable
Can be left floating if driven low the Bluetooth interface will be disabled. Internal pulled up via 1.8K to CM4_3.3V
BT,WiFi Control
CM4_BT_EN
CM4_WIFI_EN
BT_nDisable
WL_nDisable
WL_nDisable
Can be left floating if driven low the wireless interface will be disabled. Internal pulled up via 1.8K to CM4_3.3V
Raspberry Pi Compute Module 4
VCC_FPGA
C55
100nF
U28
CEC_A
SCL_A
SDA_A
HDMI_RX_EN
CEC_RX
SCL_RX
SDA_RX
HPD_X
CT_HPD_RX
5V_OUT
C56
100nF
TPD12S016PWR
HDMI_RX2_P
HDMI_RX2_N
HDMI_RX1_P
HDMI_RX1_N
HDMI_RXC_P
HDMI_RX0_N
HDMI_RX0_P
HDMI_RXC_N
CM4G
CEC is also supported, an internal 27K pullup resistor is included in the CM4.
HDMI0
HDMI0_TX2_P
HDMI0_TX2_N
HDMI0_TX1_P
HDMI0_TX1_N
HDMI0_TX0_P
HDMI0_TX0_N
HDMI0_CLK_P
HDMI0_CLK_N
HDMI0_CEC
HDMI0_SCL
HDMI0_SDA
HDMI0_HOTPLUG
HDMI0_HOTPLUG
Input HDMI1 Hotplug Internally pulled down with a 100K. 5V tolerant.
HDMI0_SDA,SCL
Bidir HDMI1 SDA Internally pulled up with a 1.8K. 5V tolerant
Raspberry Pi Compute Module 4
CM4M
Boot,Reset,Power Control
CM4_EN
GLOBAL_EN
nRPIBOOT
nEXTRST
RUN_PG
AnalogIP0
AnalogIP1
GLOBAL_EN (Input)
Drive low to power off CM4. Internally pulled up with a 100K to +5V
nRPI_BOOT (Input)
During boot if this pin is low booting from eMMC will be stopped and booting will be transferred to rpi boot which is via
nEXTRST (Output)
Driven low during reset
Driven high (CM4_3.3V) once CM4 CPU has started to boot
RUN_PG
Bidirectional pin. Internally pulled up to +3.3V via 10K
>Input
Can be driven low (via a 220R resistor) to Reset the CM4 CPU.
Ouput >
Output a high signals Power Good and CPU running.
Analog IP0,IP1
Analog input of the MAX7704. Typically connected to CC pin of Type C power connector
Raspberry Pi Compute Module 4
CM4A
GPIO load 50mA in total
GPIO
GPIO_VREF
SDA1
SCL1
GPCLK0
GPIO2
GPIO3
GPIO4
GPIO17
GPIO27
GPIO22
SPI0_MOSI
SPI0_MISO
SPI0_CLK
GPIO10
GPIO9
GPIO11
GPIO5
GPIO6
GPIO19
GPIO26
GPIO14
GPIO15
GPIO18
GPIO23
GPIO24
GPIO25
GPIO8
GPIO7
GPIO16
GPIO20
GPIO21
TXD0
RXD0
SPI0_CE0
SPI0_CE1
CM4_TX
CM4_RX
Raspberry Pi Compute Module 4
CM4L
Pi_nLED_Activity
Low Active Pi Activity LED. 20mA Max 5V tolerant (VOL<0.4V). (this is the signal that drives the Green LED on the Raspberry Pi 4, Model B)
LEDs
Pi_nLED_Activity
PI_LED_nPWR
PI_LED_nPWR
Low active Output to drive Power On LED. This signal needs to be buffered.
Raspberry Pi Compute Module 4
CM4C
VCC_MIC
VIN 4.75V-5.25V (*Max 6V)
Power Required 5V 2A (10W) Avg Power
+5V (Input)
Raspberry Pi Compute Module 4
Title
Size
A4
Number
Revision
Date: 6.04.2021
Sheet of
File: D:\projects\..\CM4.SchDoc
Drawn By:

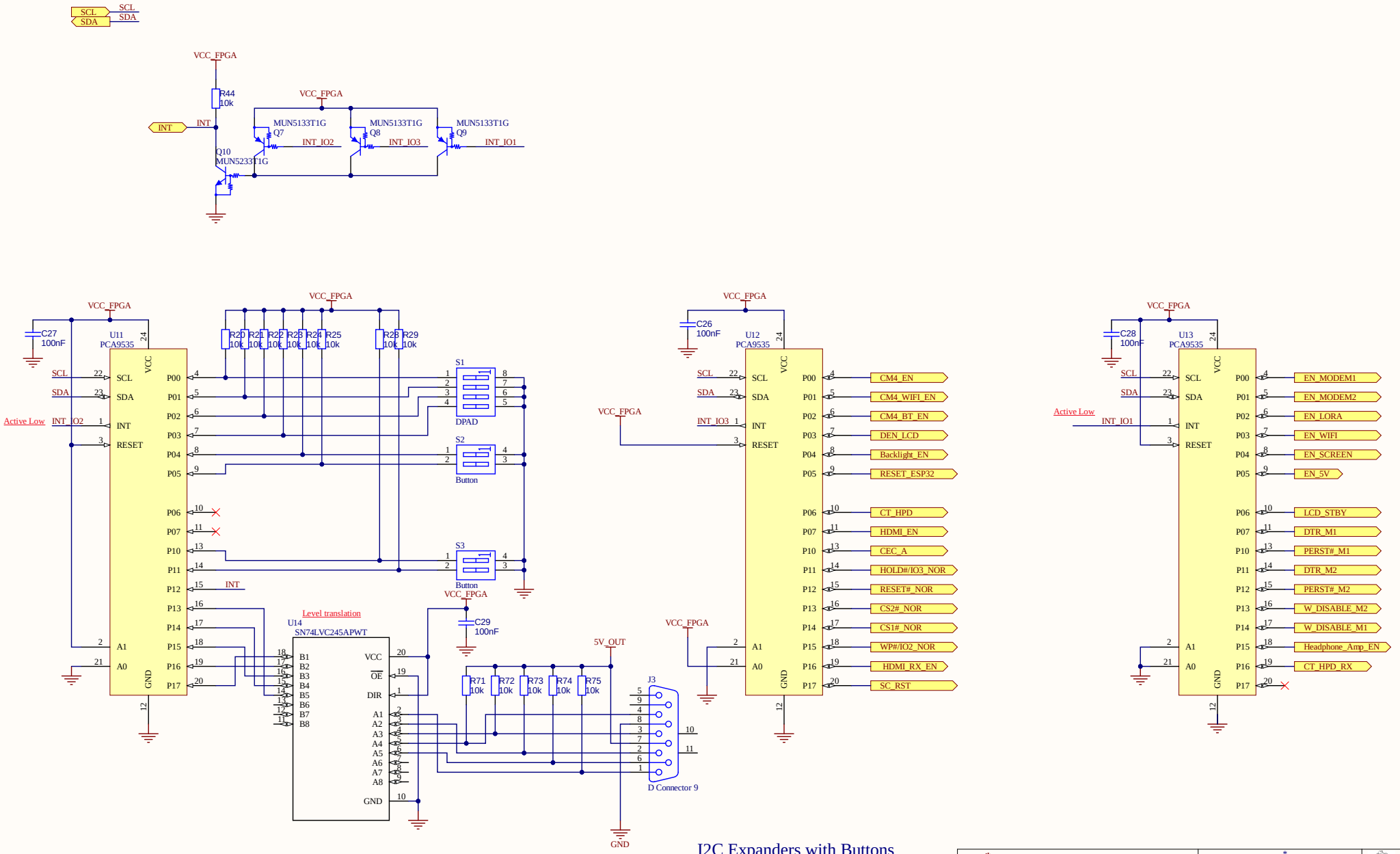

I2C Expanders with Buttons

Title *			* * * Bedford Park SA *
Size: A3	Number: *	Drawn By: *	
Date: 4.6.2021.	Revision: *	Sheet * of *	
File: D:\projects\lrnas\PCB_designs\Altium\megaphone-r2-nohistory\I2C Expanders.SchDoc			

Lachlan Mitchell

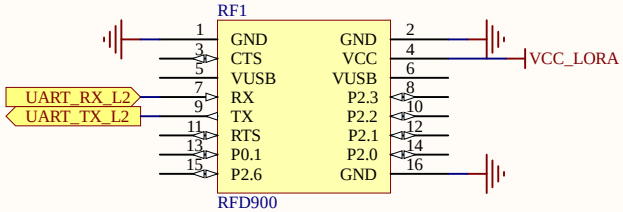

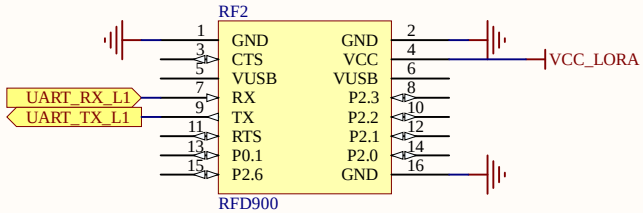

Title * LoRa Modules			* * * * *
Size: A4	Number: *	Drawn By: *	
Date: 4.6.2021.	Revision: *	Sheet * of *	11 17
File: D:\projects\lrnas\PCB_designs\Altium\megaphone-r2-nohistory\LoRa Radio.SchDoc			Lachlan McDonald

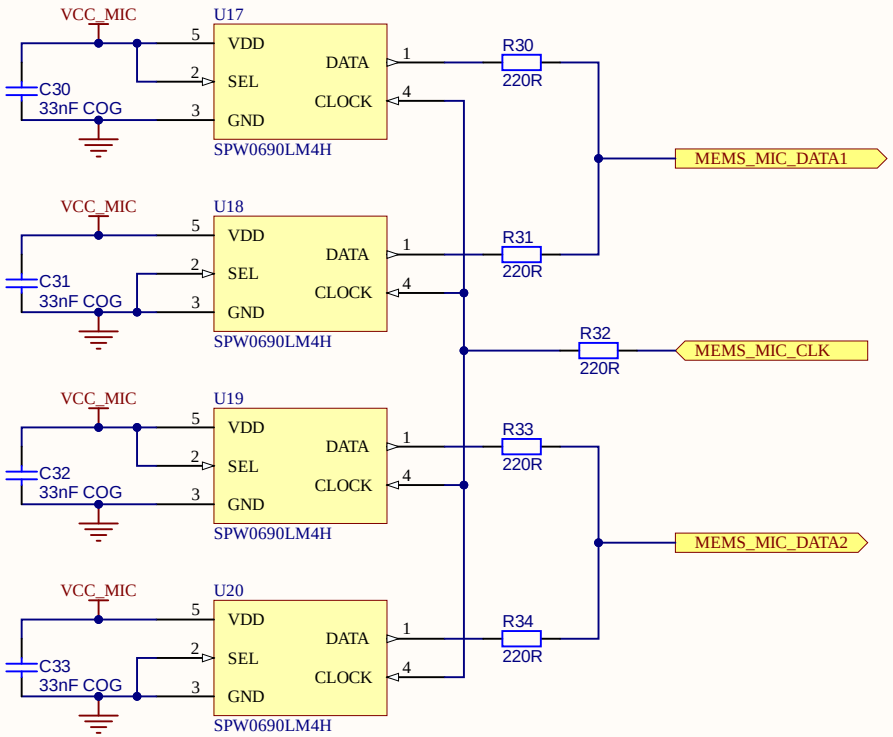

Title *			* * * * *
Size: A4	Number: *	Drawn By: *	
Date: 4.6.2021.	Revision: *	Sheet * of *	16 17
File: D:\projects\lrnas\PCB_designs\Altium\megaphone-r2-nohistory\MEMS MICs.SchDoc			Lachlan McDonald

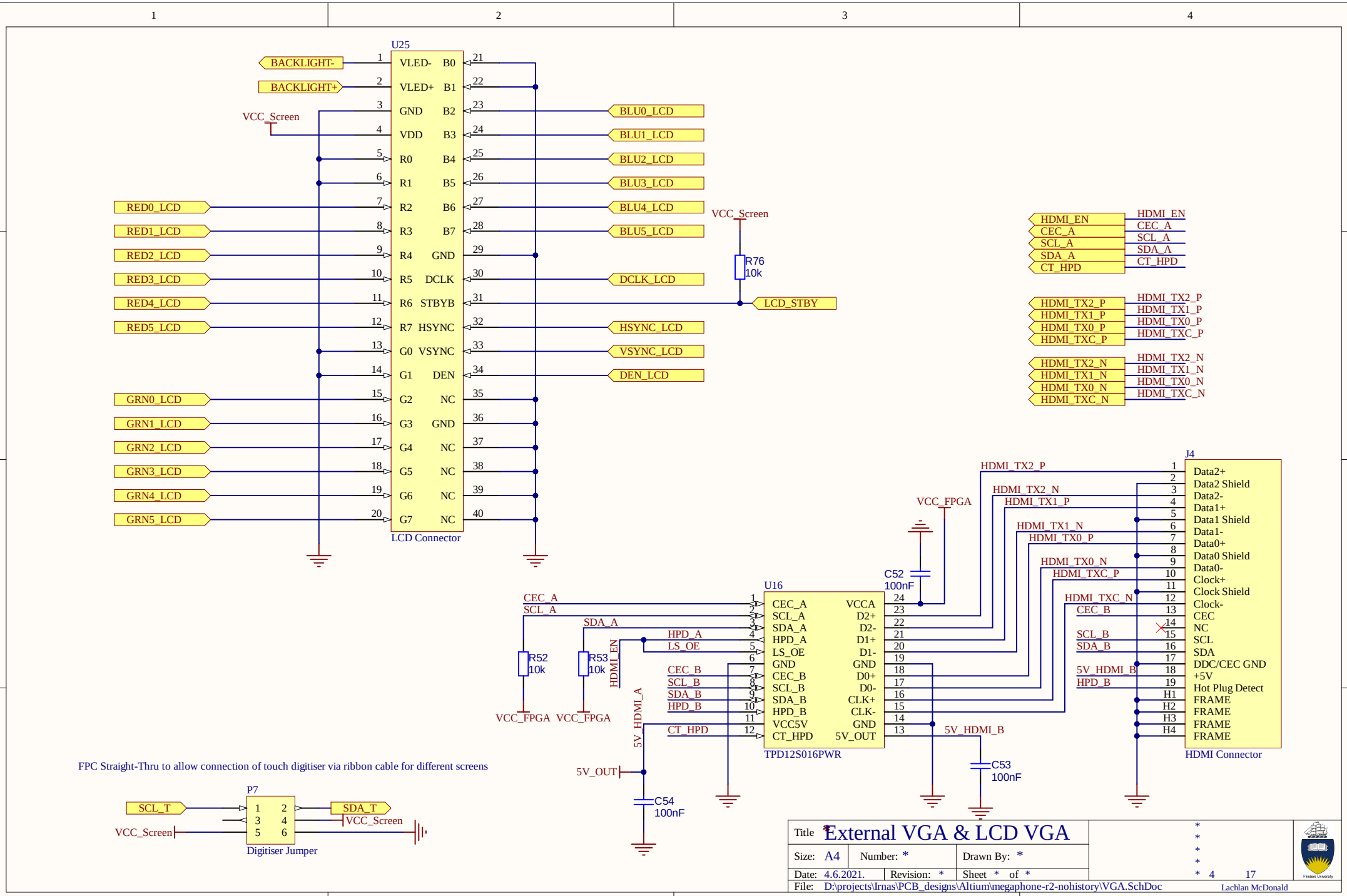
U25
BACKLIGHT-
BACKLIGHT+
VCC_Screen
VLED- B0
VLED+ B1
GND B2
VDD B3
R0 B4
R1 B5
R2 B6
R3 B7
R4 GND
R5 DCLK
R6 STBYB
R7 HSYNC
G0 VSYNC
G1 DEN
G2 NC
G3 GND
G4 NC
G5 NC
G6 NC
G7 NC
BLU0_LCD
BLU1_LCD
BLU2_LCD
BLU3_LCD
BLU4_LCD
BLU5_LCD
DCLK_LCD
LCD_STBY
HSYNC_LCD
VSYNC_LCD
DEN_LCD
RED0_LCD
RED1_LCD
RED2_LCD
RED3_LCD
RED4_LCD
RED5_LCD
GRN0_LCD
GRN1_LCD
GRN2_LCD
GRN3_LCD
GRN4_LCD
GRN5_LCD
LCD Connector
R76
10k
HDMI_EN
CEC_A
SCL_A
SDA_A
CT_HPD
HDMI_TX2_P
HDMI_TX1_P
HDMI_TX0_P
HDMI_TXC_P
HDMI_TX2_N
HDMI_TX1_N
HDMI_TX0_N
HDMI_TXC_N
J4
Data2+
Data2 Shield
Data2-
Data1+
Data1 Shield
Data1-
Data0+
Data0 Shield
Data0-
Clock+
Clock Shield
Clock-
CEC
NC
SCL
SDA
DDC/CEC GND
+5V
Hot Plug Detect
FRAME
HDMI Connector
VCC_FPGA
C52
100nF
U16
CEC_A
SCL_A
SDA_A
HPD_A
LS_OE
GND
CEC_B
SCL_B
SDA_B
HPD_B
VCC5V
CT_HPD
VCCA
D2+
D2-
D1+
D1-
D0+
D0-
CLK+
CLK-
5V_OUT
TPD12S016PWR
R52
10k
R53
10k
HDMI_EN
5V_HDMI_A
5V_HDMI_B
C53
100nF
C54
100nF
FPC Straight-Thru to allow connection of touch digitiser via ribbon cable for different screens
P7
SCL_T
SDA_T
Digitiser Jumper
Title External VGA & LCD VGA
Size: A4
Number: *
Drawn By: *
Date: 4.6.2021.
Revision: *
Sheet * of *
File: D:\projects\lrnas\PCB_designs\Altium\megaphone-r2-nohistory\VGA.SchDoc
4 17
Lachlan McDonald

MEGA65

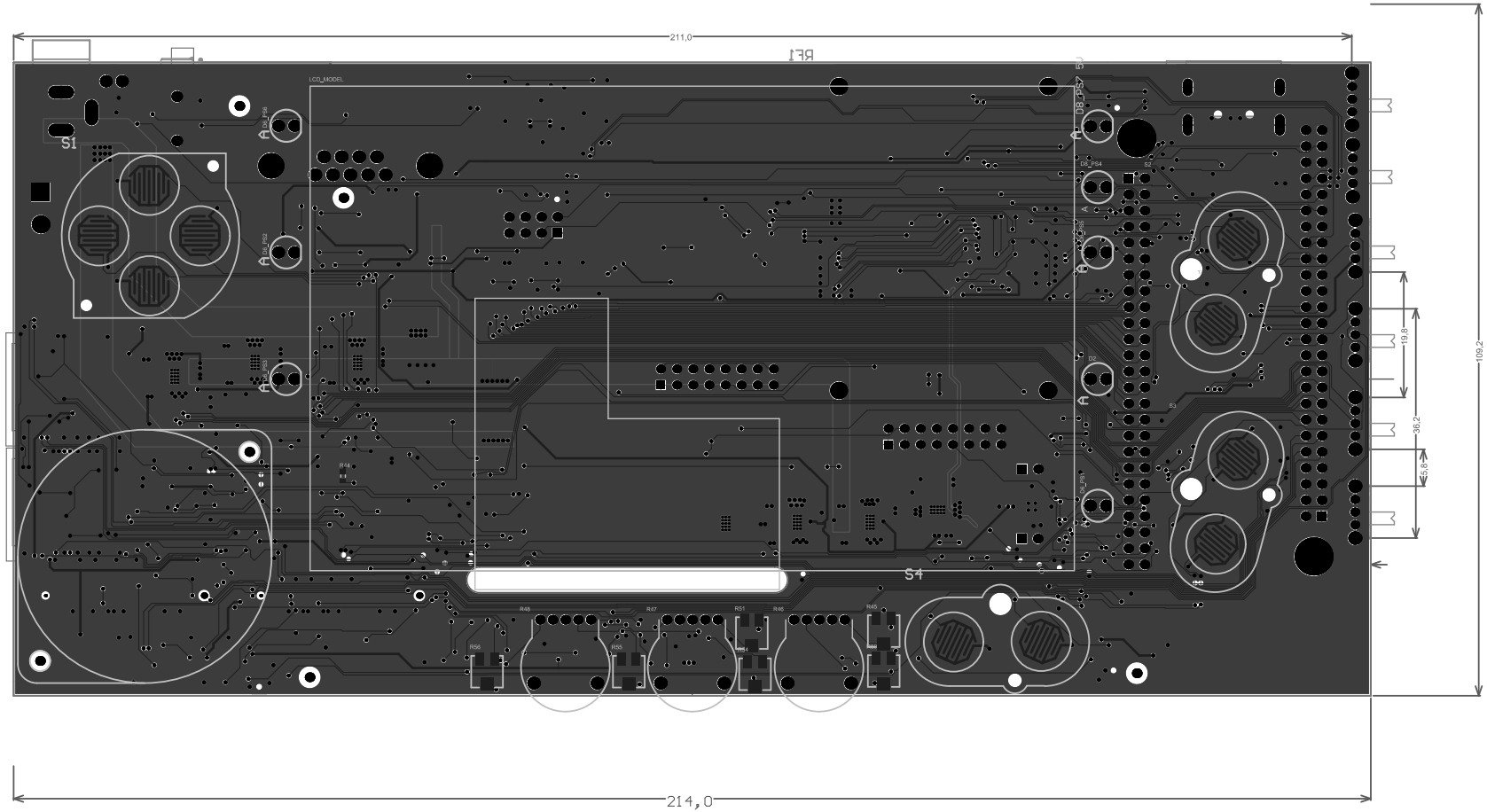
211,0
109,2
19,8
36,2
5,8
214,0
S1
S4
LCD_MODEL
R44
R46
R47
R51
R45
R56
R55
R54
R53
R52
D8_PS7
D9_PS6
D10_PS5
D11_PS4
D12_PS3
D13_PS2
D14_PS1
D15_PS0
E1
E2
E3
E4
E5
E6
E7
E8
E9
E10
E11
E12
E13
E14
E15
E16
E17
E18
E19
E20
E21
E22
E23
E24
E25
E26
E27
E28
E29
E30
E31
E32
E33
E34
E35
E36
E37
E38
E39
E40