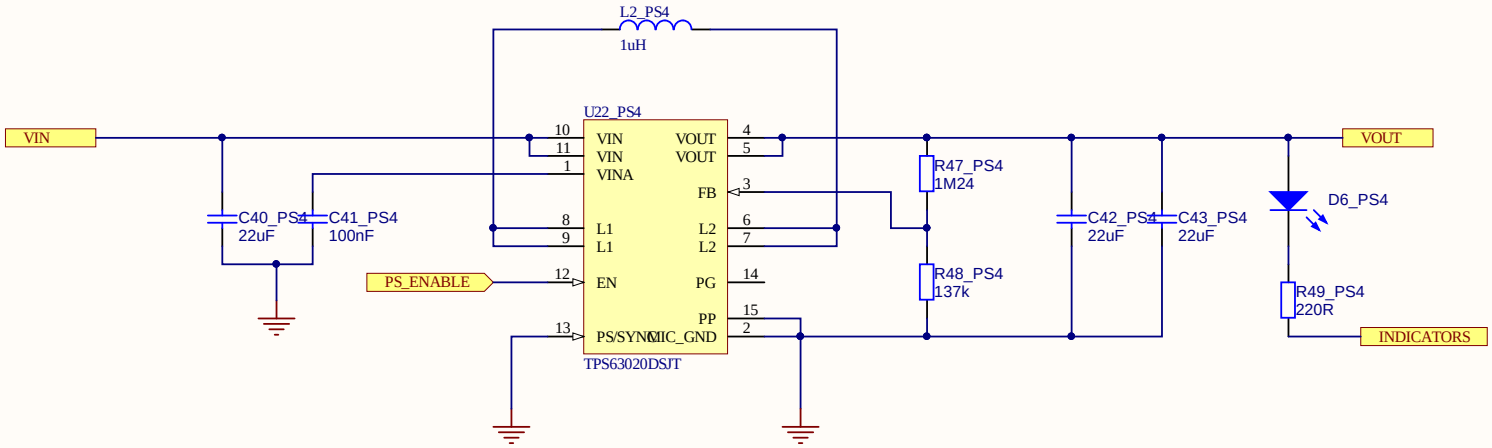

Title		
Size A4	Number	Revision
Date: 4/14/2022		Sheet of
File: \\..\PowerSupply5V.SchDoc		Drawn By:

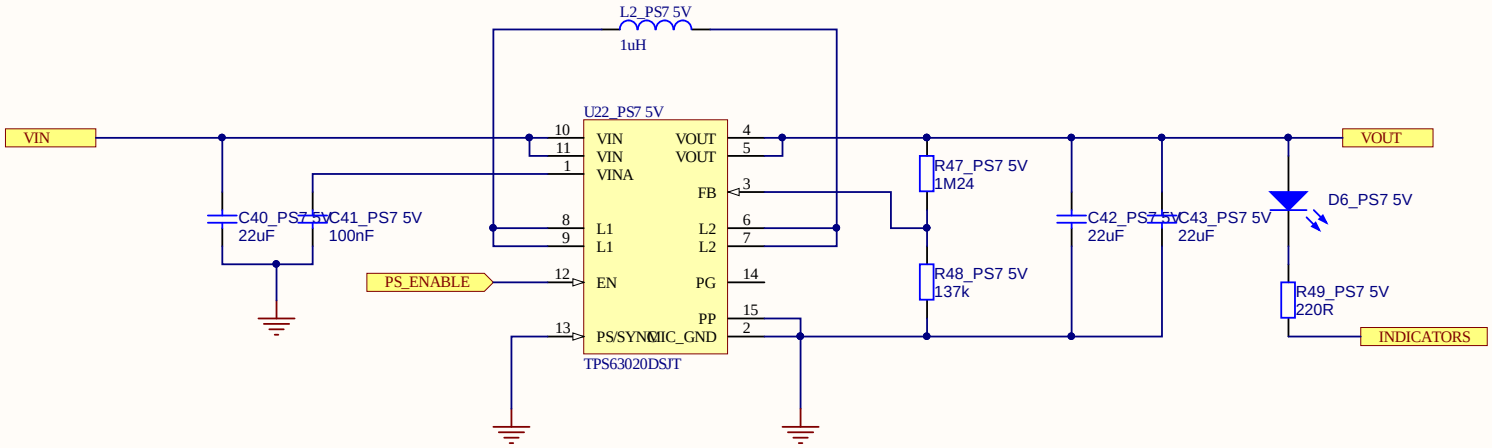

Title		
Size A4	Number	Revision
Date: 4/14/2022		Sheet of
File: \\..\PowerSupply5V.SchDoc		Drawn By:

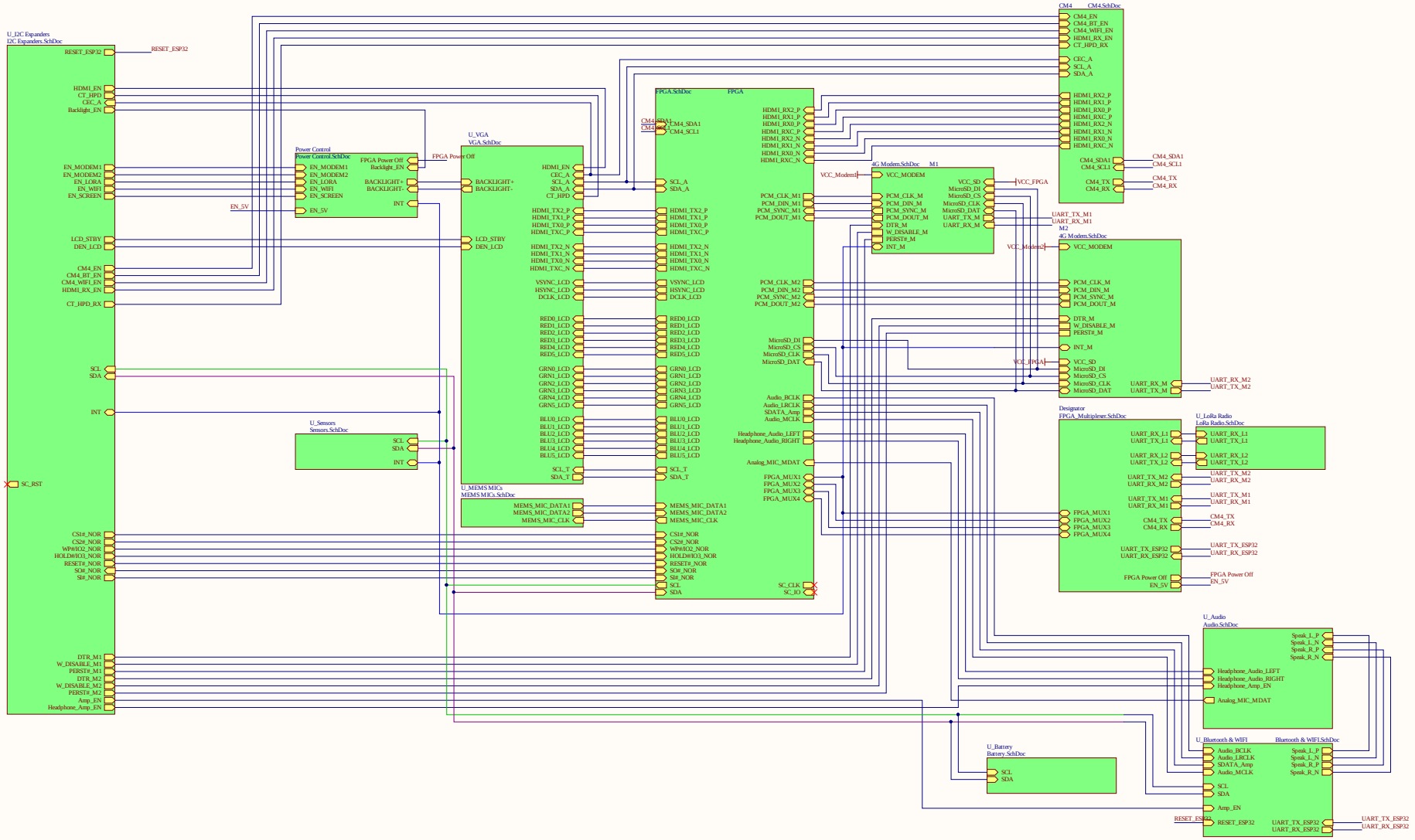
U_I2C Expanders
I2C Expanders.SchDoc
RESET_ESP32
HDMI1_EN
CT_HPD
CEC_A
Backlight_EN
EN_MODEM1
EN_MODEM2
EN_LORA
EN_WIFI
EN_SCREEN
LCD_STBY
DEN_LCD
CM4_EN
CM4_BT_EN
CM4_WIFI_EN
HDMI_RX_EN
CT_HPD_RX
SCL
SDA
INT
SC_RST
CS#_NOR
CS2#_NOR
WP#/IO2_NOR
HOLD#/IO3_NOR
RESET#_NOR
SO#_NOR
SI#_NOR
DTR_M1
W_DISABLE_M1
PERST#_M1
DTR_M2
W_DISABLE_M2
PERST#_M2
Amp_EN
Headphone_Amp_EN
Power Control
Power Control.SchDoc
FPGA Power Off
Backlight_EN
BACKLIGHT+
BACKLIGHT-
INT
EN_5V
U_VGA
VGA.SchDoc
LCD_STBY
DEN_LCD
U_Sensors
Sensors.SchDoc
U_MEMS MICs
MEMS MICs.SchDoc
MEMS_MIC_DATA1
MEMS_MIC_DATA2
MEMS_MIC_CLK
FPGA.SchDoc
FPGA
CM4_SDA1
CM4_SCL1
SC_CLK
SC_IO
CM4
CM4.SchDoc
CM4_TX
CM4_RX
4G Modem.SchDoc
M1
VCC_MODEM
VCC_SD
MicroSD_DI
MicroSD_CS
MicroSD_CLK
MicroSD_DAT
UART_TX_M
UART_RX_M
VCC_FPGA
VCC_Modem1
UART_TX_M1
UART_RX_M1
M2
VCC_Modem2
UART_RX_M2
UART_TX_M2
Designator
FPGA_Multiplexer.SchDoc
FPGA_MUX1
FPGA_MUX2
FPGA_MUX3
FPGA_MUX4
UART_TX_ESP32
UART_RX_ESP32
U_LoRa Radio
LoRa Radio.SchDoc
UART_RX_L1
UART_TX_L1
UART_RX_L2
UART_TX_L2
U_Audio
Audio.SchDoc
Speak_L_P
Speak_L_N
Speak_R_P
Speak_R_N
Headphone_Audio_LEFT
Headphone_Audio_RIGHT
Headphone_Amp_EN
Analog_MIC_MDAT
U_Bluetooth & WIFI
Bluetooth & WIFI.SchDoc
Audio_BCLK
Audio_LRCLK
SDATA_Amp
Audio_MCLK
U_Battery
Battery.SchDoc
Title Mega Phone
Size A2
Number A4284
Revision 1
Date 4/14/2022
Time 10:17:38
Sheet 1 of 1
Flinders University
College of Science & Engineering
Engineering Services Room 3.22
1284 South Rd
SA 5042
Altium

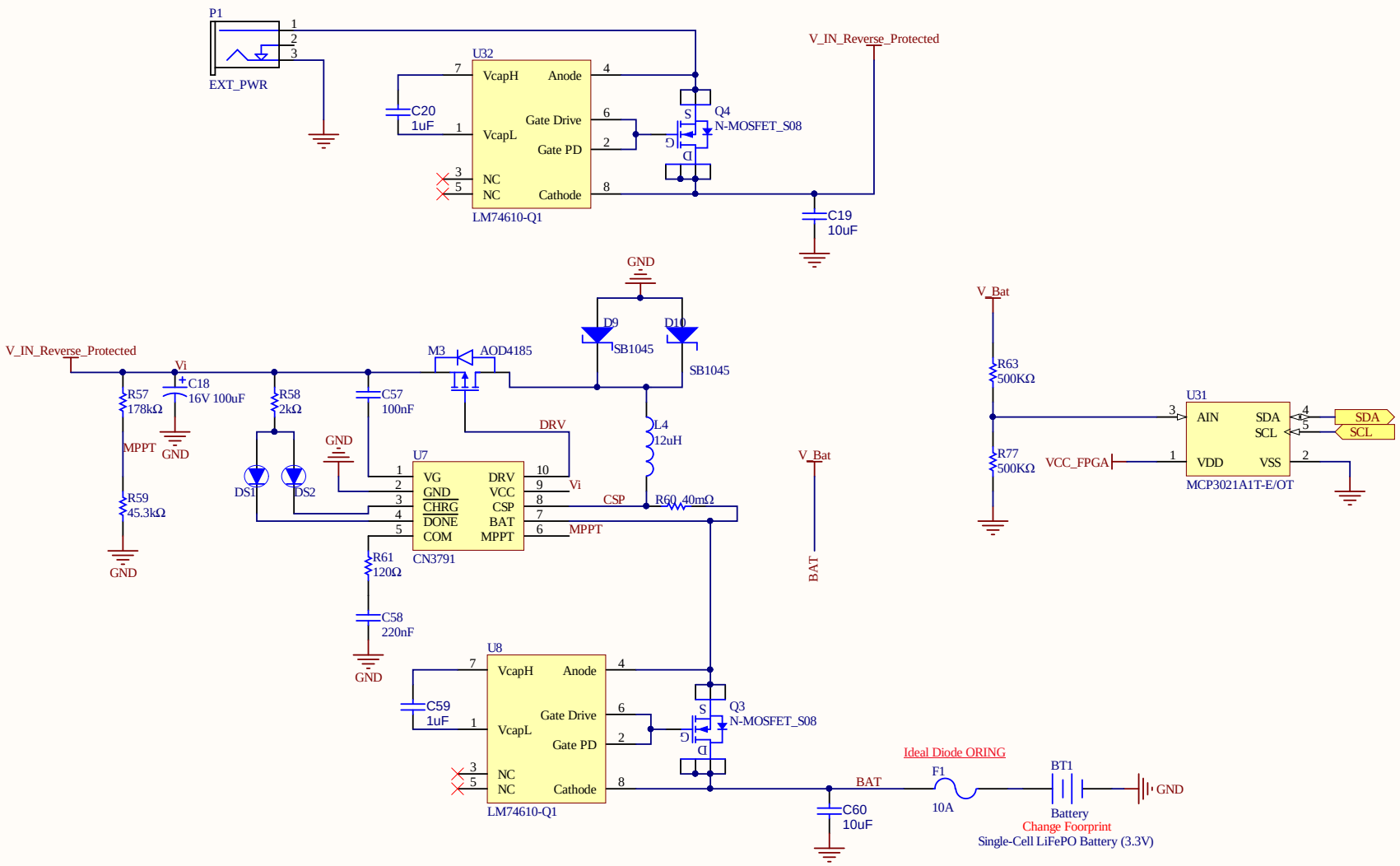

Title	TITLE		Flinders University College of Science & Engineering Engineering Services Room 3.22 1284 South Rd SA 5042
Size: A4	Number: A4	Drawn By: D Kleiss	
Date: 4/14/2022	Revision: 1	Sheet 1 of 1	
File: \\TAVU\TAVU Outside Projects\2022\04-2022 Megaphone PCB\Altium\V1.0.0\Battery.SchDoc			

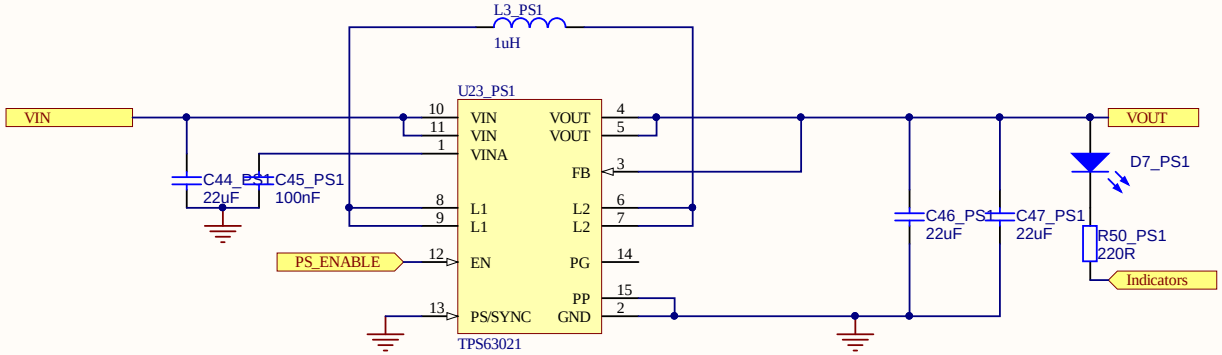

Title	TITLE		Flinders University College of Science & Engineering Engineering Services Room 3.22 1284 South Rd SA 5042
Size: A4	Number: A4	Drawn By: D Kleiss	
Date: 4/14/2022	Revision: 1	Sheet 1 of 1	
File: \\TAVU\TAVU Outside Projects\2022\04-2022 Megaphone PCB\Altium\V1.0.0\PowerSupply.SchDoc			

Sallen-Key Butterworth Low Pass 4th Order Filter

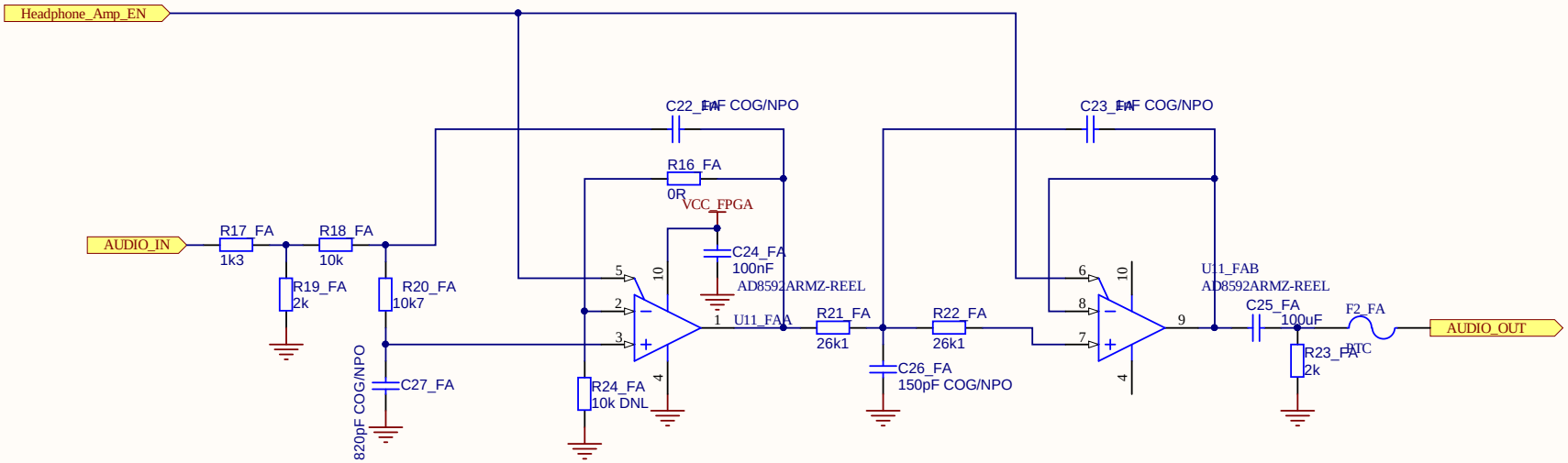

Title	TITLE		Flinders University College of Science & Engineering Engineering Services Room 3.22 1284 South Rd SA 5042
Size: A4	Number: A4	Drawn By: D Kleiss	
Date: 4/14/2022	Revision: 1	Sheet 1 of 1	
File: \\TAVU\TAVU Outside Projects\2022\04-2022 Megaphone PCB\Altium\V1.0.0\Headphone Filter.SchDoc			

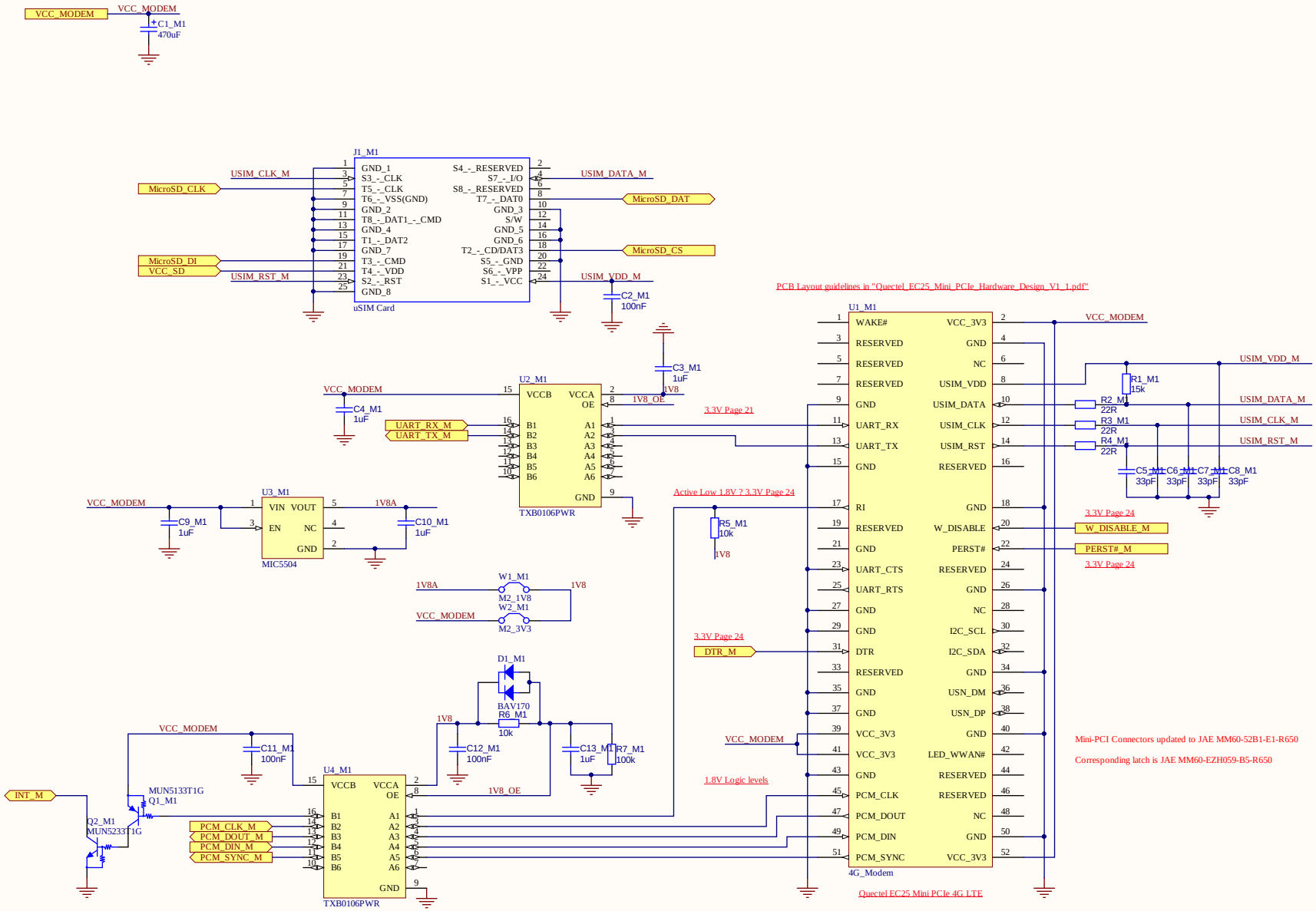

MEGA65

Title	TITLE		Flinders University College of Science & Engineering Engineering Services Room 3.22 Bedford Park SA SA 5042
Size: A3	Number: A4	Drawn By: D Kleiss	
Date: 4/14/2022	Revision: 1	Sheet 1 of 1	
File: \\TAVU\TAVU Outside Projects\2022\04-2022 Megaphone PCB\Altium\V1.0.0\4G Modem.SchDoc			

6 17 Lachlan McDonald

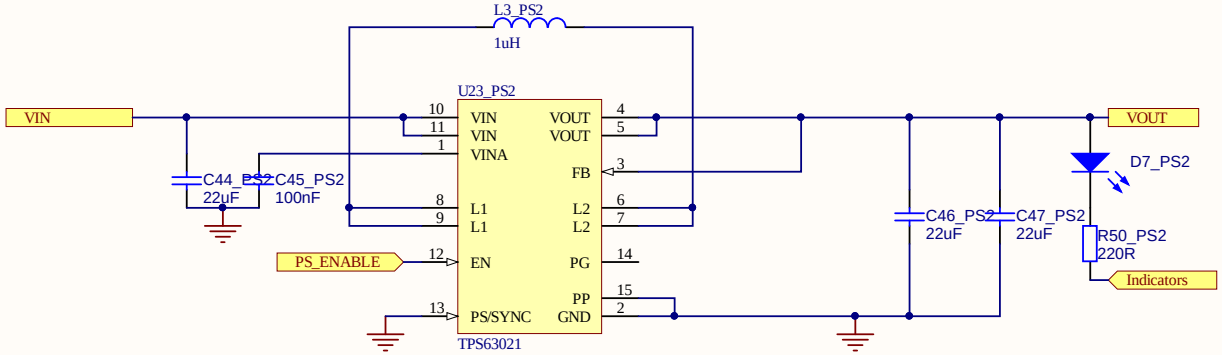

Title	TITLE		Flinders University College of Science & Engineering Engineering Services Room 3.22 1284 South Rd SA 5042
Size: A4	Number: A4	Drawn By: D Kleiss	
Date: 4/14/2022	Revision: 1	Sheet 1 of 1	
File: \\TAVU\TAVU Outside Projects\2022\04-2022 Megaphone PCB\Altium\V1.0.0\PowerSupply.SchDoc			

Sallen-Key Butterworth Low Pass 4th Order Filter

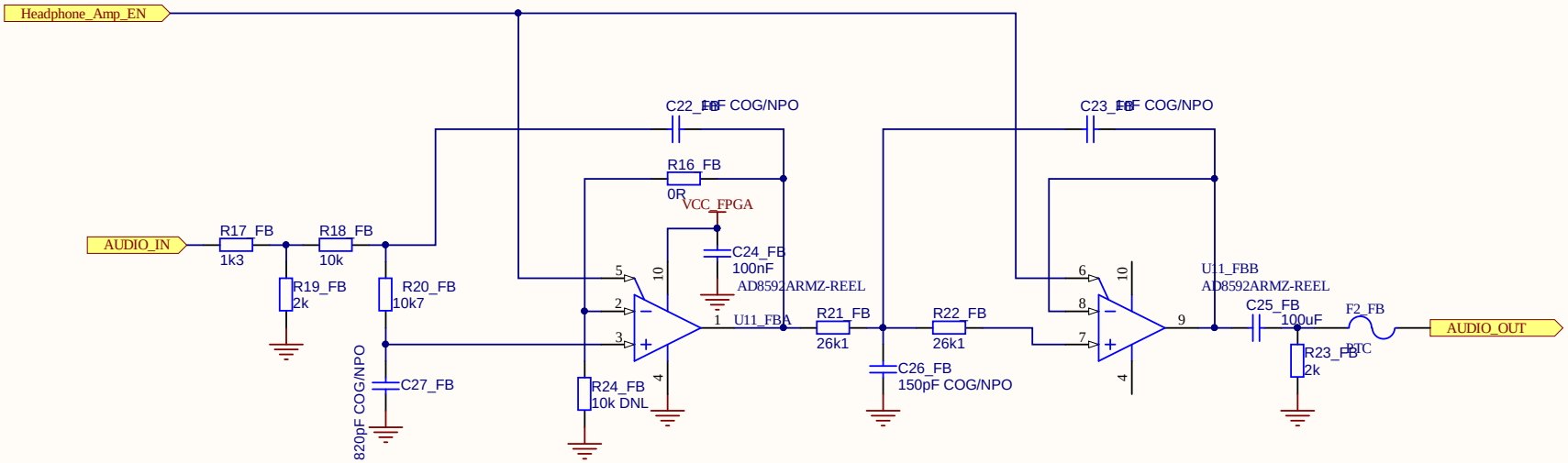

Title	TITLE		Flinders University College of Science & Engineering Engineering Services Room 3.22 1284 South Rd SA 5042
Size: A4	Number: A4	Drawn By: D Kleiss	
Date: 4/14/2022	Revision: 1	Sheet 1 of 1	
File: \\TAVU\TAVU Outside Projects\2022\04-2022 Megaphone PCB\Altium\V1.0.0\Headphone Filter.SchDoc			

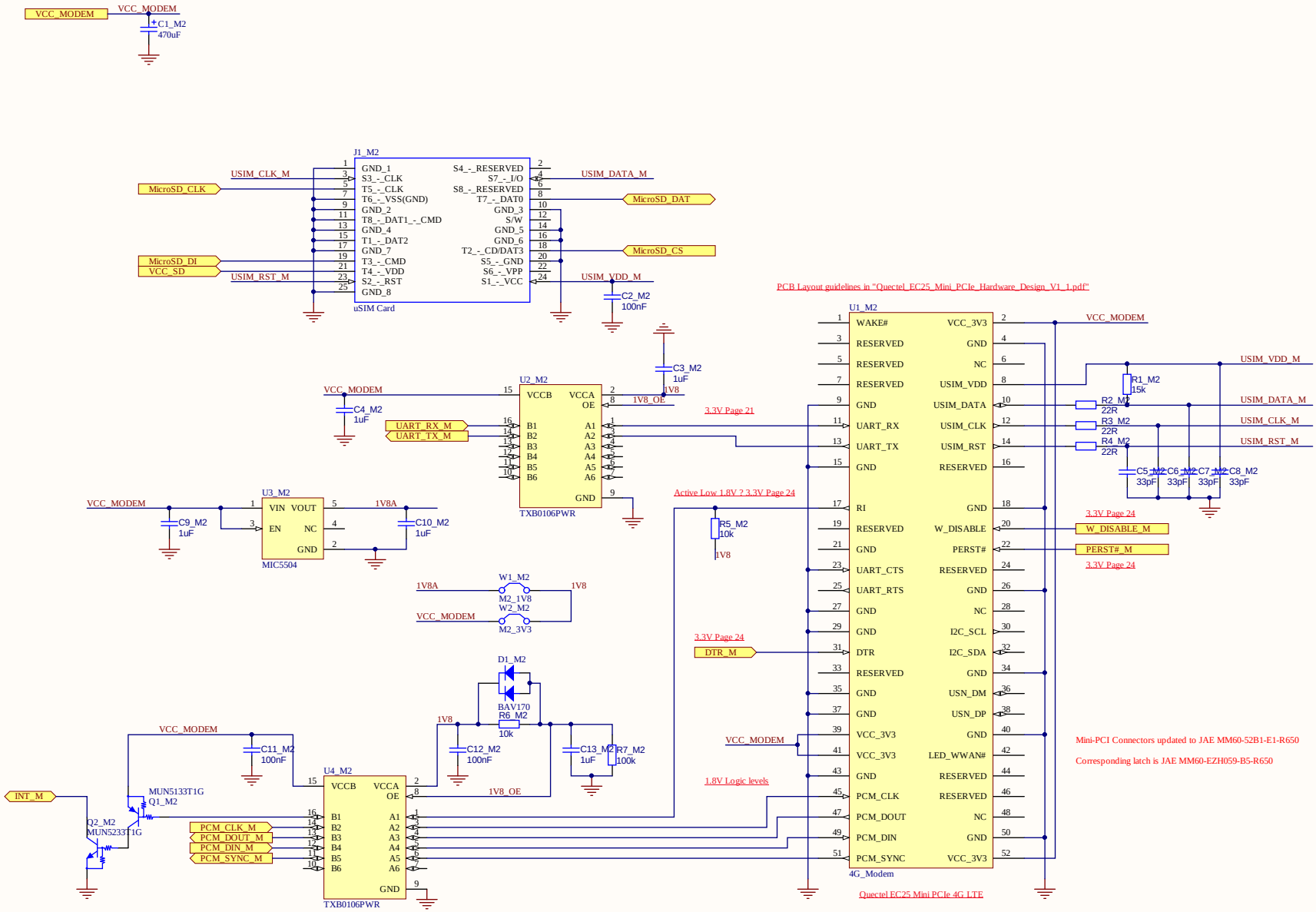

MEGA65

Title	TITLE		Flinders University College of Science & Engineering Engineering Services Room 3.22 Bedford Park SA SA 5042
Size: A3	Number: A4	Drawn By: D Kleiss	
Date: 4/14/2022	Revision: 1	Sheet 1 of 1	
File: \\TAVU\TAVU Outside Projects\2022\04-2022 Megaphone PCB\Altium\V1.0.0\4G Modem.SchDoc			

6 17 Lachlan McDonald

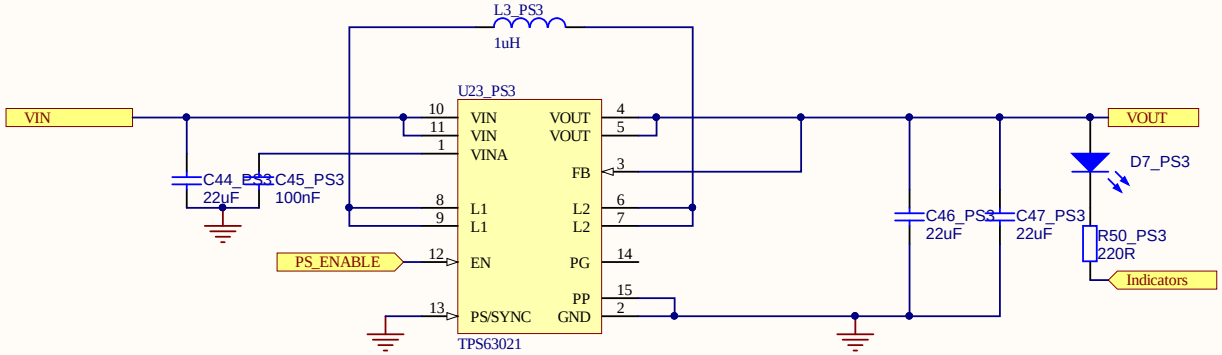

Title	TITLE		Flinders University College of Science & Engineering Engineering Services Room 3.22 1284 South Rd SA 5042
Size: A4	Number: A4	Drawn By: D Kleiss	
Date: 4/14/2022	Revision: 1	Sheet 1 of 1	
File: \\TAVU\TAVU Outside Projects\2022\04-2022 Megaphone PCB\Altium\V1.0.0\PowerSupply.SchDoc			

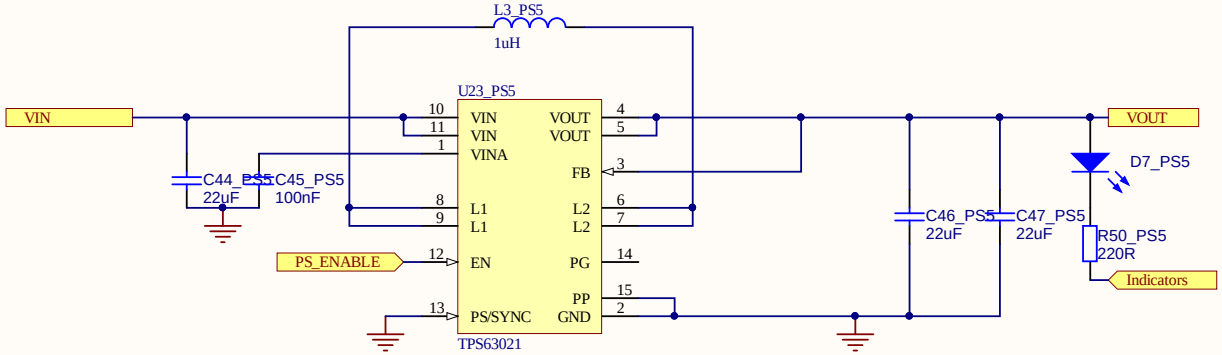

Title	TITLE		Flinders University College of Science & Engineering Engineering Services Room 3.22 1284 South Rd SA 5042
Size: A4	Number: A4	Drawn By: D Kleiss	
Date: 4/14/2022	Revision: 1	Sheet 1 of 1	
File: \\TAVU\TAVU Outside Projects\2022\04-2022 Megaphone PCB\Altium\V1.0.0\PowerSupply.SchDoc			

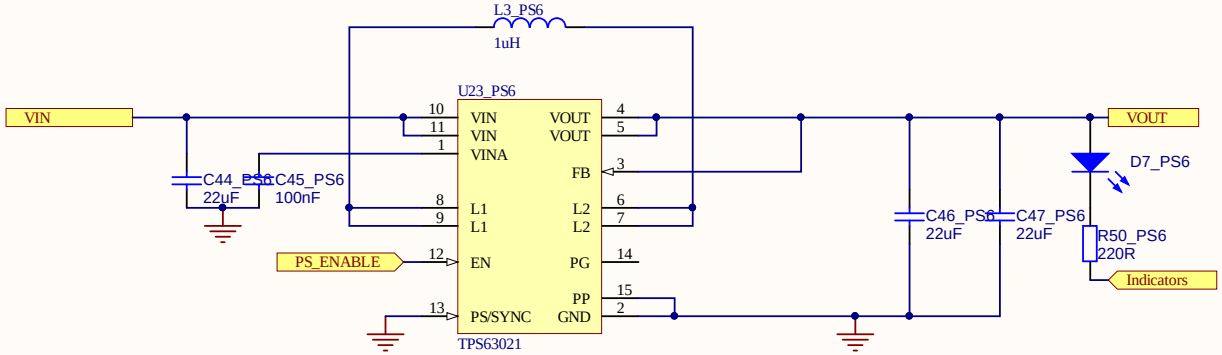

Title	TITLE		Flinders University College of Science & Engineering Engineering Services Room 3.22 1284 South Rd SA 5042
Size: A4	Number: A4	Drawn By: D Kleiss	
Date: 4/14/2022	Revision: 1	Sheet 1 of 1	
File: \\TAVU\TAVU Outside Projects\2022\04-2022 Megaphone PCB\Altium\V1.0.0\PowerSupply.SchDoc			

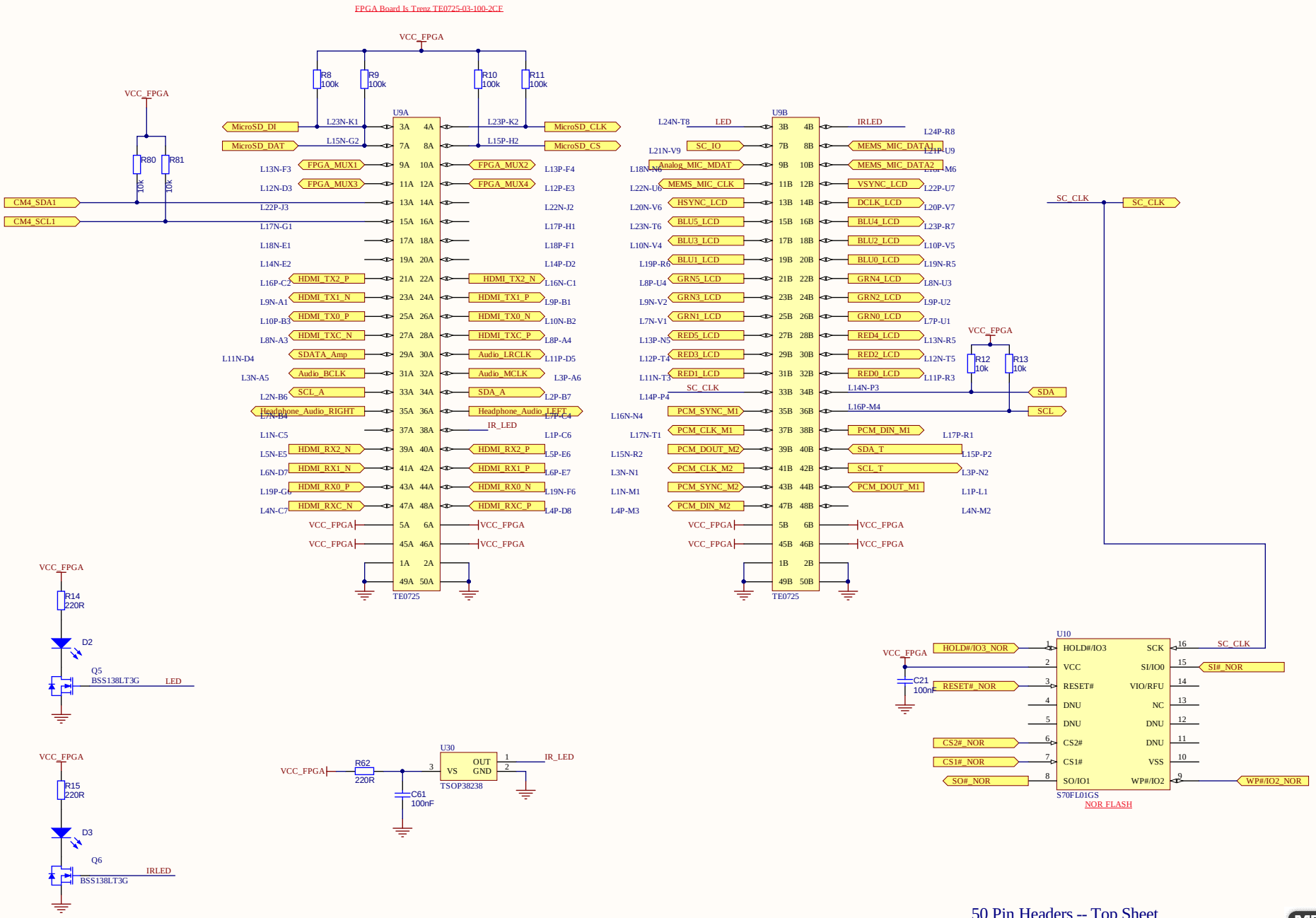

50 Pin Headers -- Top Sheet

Title	*MEGAPHONE FPGA*	
Size: A3	Number: *	Drawn By: *
Date: 4/14/2022	Revision: *	Sheet 2 of *
File: \\TAVU\TAVU Outside Projects\2022\04-2022 Megaphone PCB\Altium\V1.0.0\FPGA.SchDoc		

Bedford Park SA

Lachlan McDonald

Cannot open file S:\CSE-CSEM esg\Electro Technical Team\Superceded\Documents\Altium\Step Models\Connectors\CUI\CUI_SJ-43515TS-SMT-TR\Mating TRRS.bmp

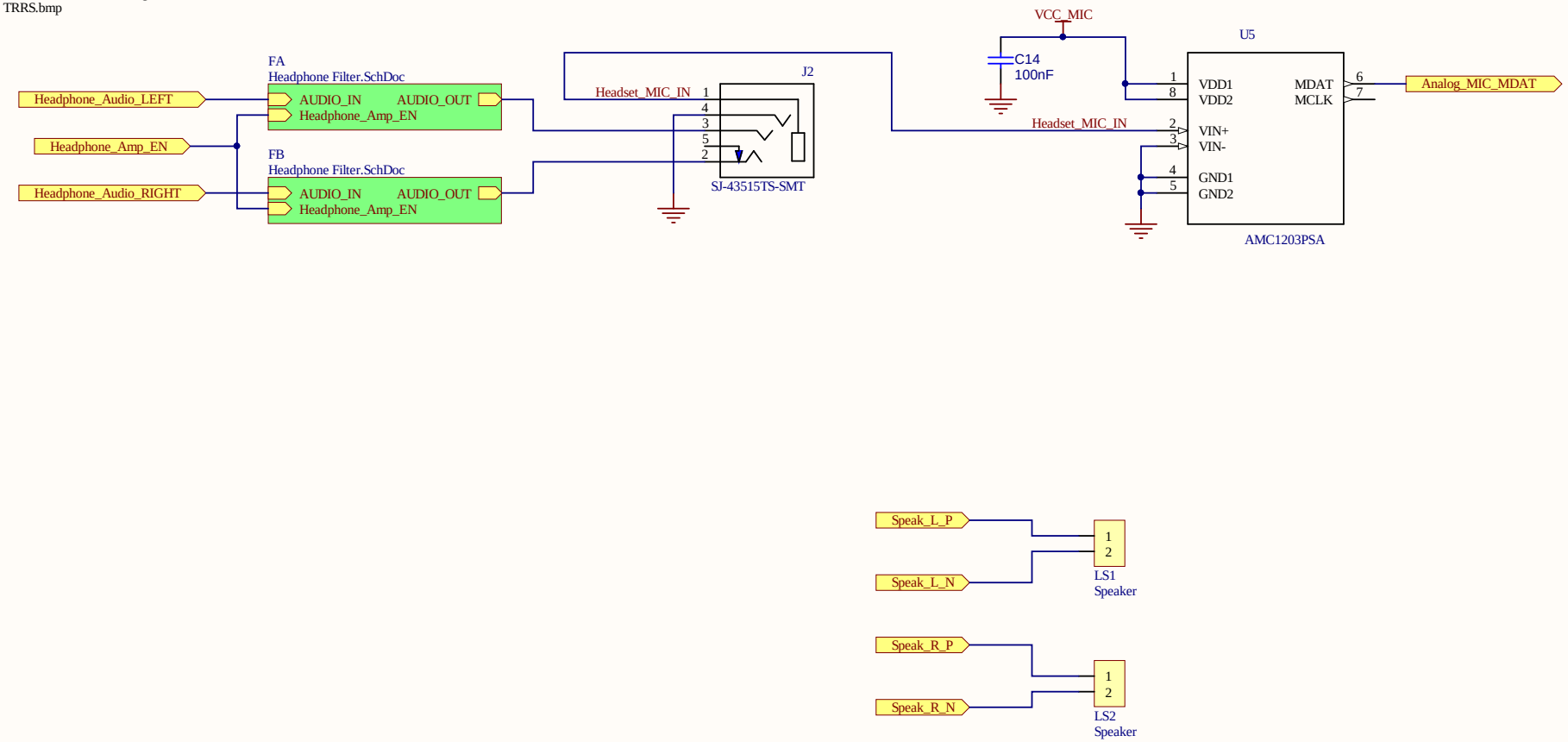

Title	*AUDIO*		
Size: A4	Number: *	Drawn By: D KLEISS	
Date: 4/14/2022	Revision: 1	Sheet 3 of 15	
File: \\TAVU\TAVU Outside Projects\2022\04-2022 Megaphone PCB\Altium\V1.0.0\Audio.SchDoc			

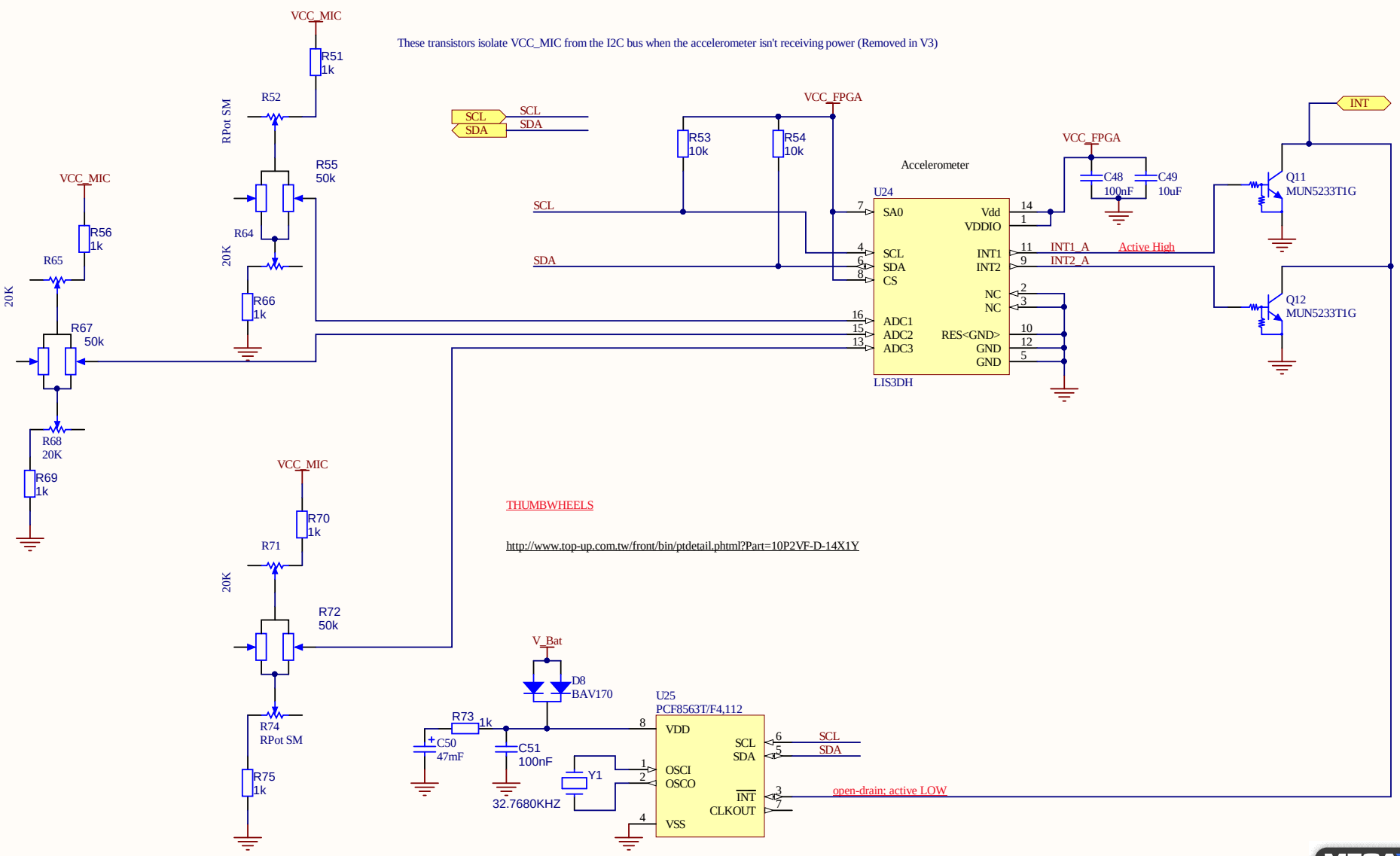

Title	**MEGAPHONE Sensors**		Flinders University College of Science & Engineering Engineering Services Room 3.22 1284 South Rd SA 5042
Size: A4	Number: A4284	Drawn By: D Kleiss	
Date: 4/14/2022	Revision: 1	Sheet 5 of 15	
File: \\TAVU\TAVU Outside Projects\2022\04-2022 Megaphone PCB\Altium\V1.0.0\Sensors.SchDoc			

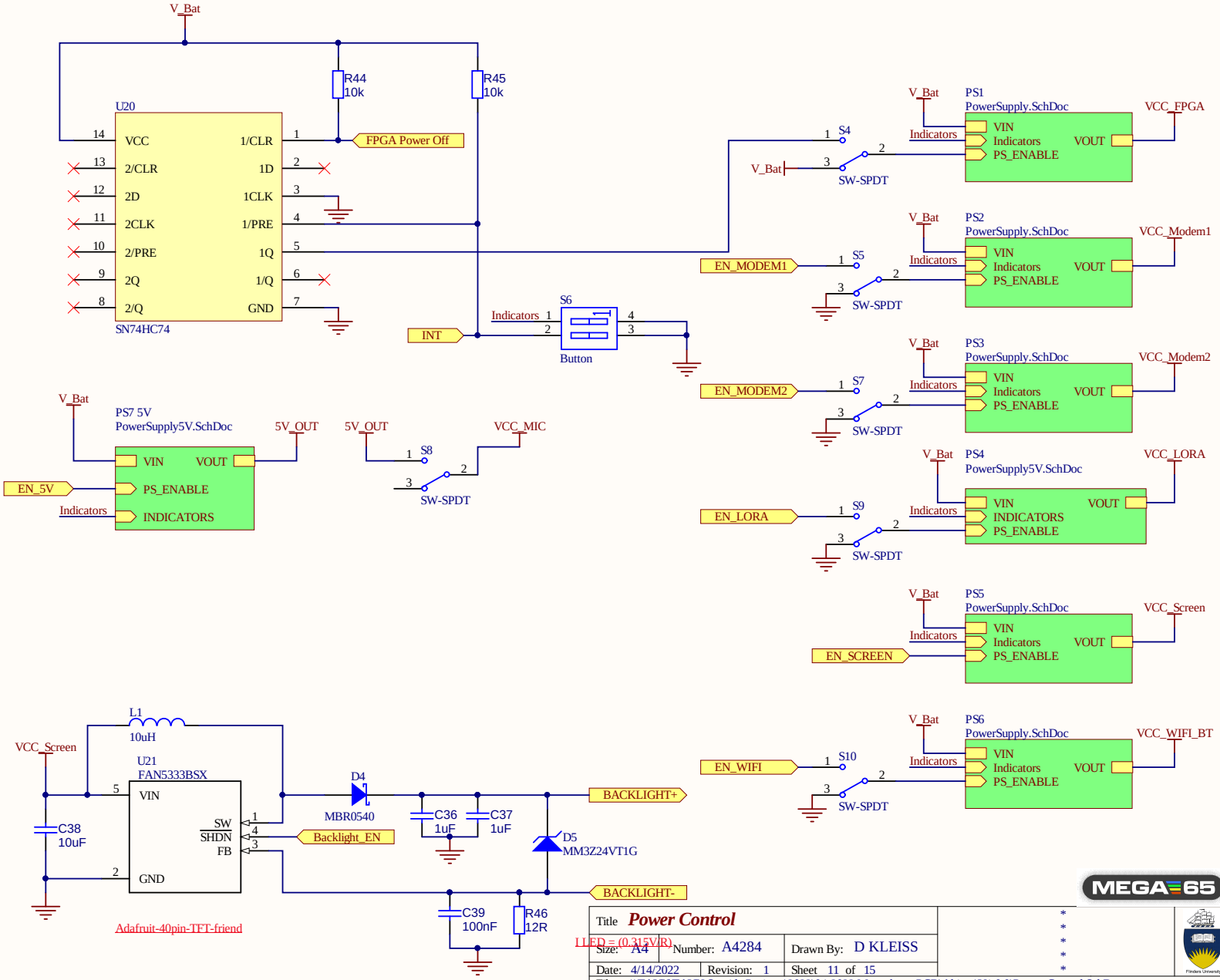

Title	**Power Control**		
Size: A4	Number: A4284	Drawn By: D KLEISS	
Date: 4/14/2022	Revision: 1	Sheet 11 of 15	
File: \\TAVU\TAVU Outside Projects\2022\04-2022 Megaphone PCB\Altium\V1.0.0\Power Control.SchDoc			

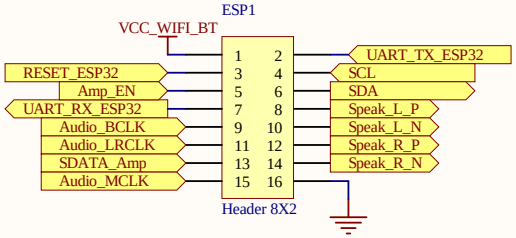

Title	***BLUETOOTH & WiFi***		* * * * *
Size: A4	Number: *	Drawn By: *	
Date: 4/14/2022	Revision: *	Sheet * of *	* 9 17
File: \\TAVU\TAVU Outside Projects\2022\04-2022 Megaphone PCB\Altium\V1.0.0\Bluetooth & WIFI.SchDoc			Sam McDonald

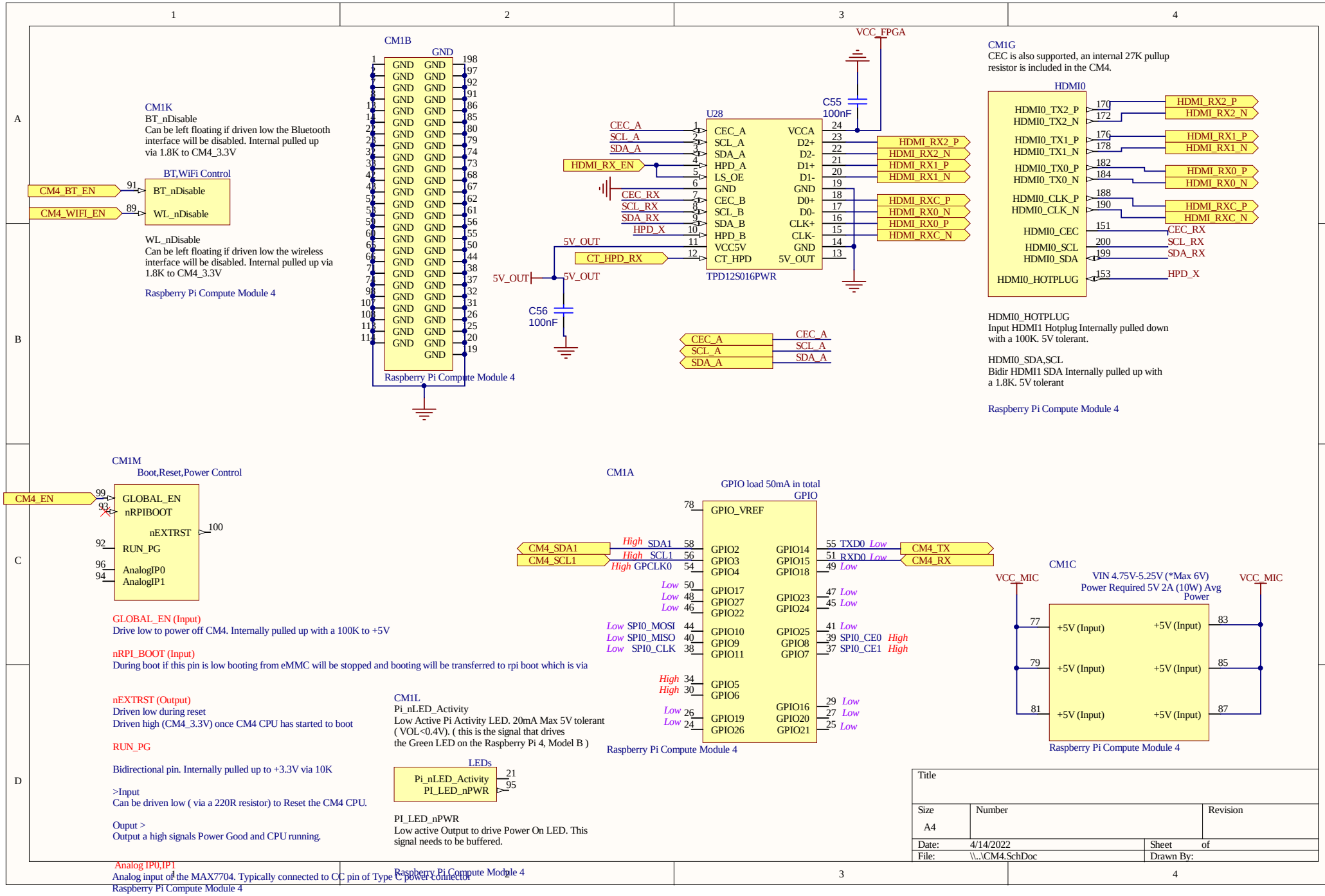
CM1K
BT_nDisable
Can be left floating if driven low the Bluetooth interface will be disabled. Internal pulled up via 1.8K to CM4_3.3V
BT,WiFi Control
CM4_BT_EN
CM4_WIFI_EN
BT_nDisable
WL_nDisable
WL_nDisable
Can be left floating if driven low the wireless interface will be disabled. Internal pulled up via 1.8K to CM4_3.3V
Raspberry Pi Compute Module 4
CM1B
GND
Raspberry Pi Compute Module 4
VCC_FPGA
C55
100nF
U28
CEC_A
SCL_A
SDA_A
HDMI_RX_EN
CEC_RX
SCL_RX
SDA_RX
HPD_X
5V_OUT
CT_HPD_RX
VCCA
D2+
D2-
D1+
D1-
GND
D0+
D0-
CLK+
CLK-
5V_OUT
TPD12S016PWR
HDMI_RX2_P
HDMI_RX2_N
HDMI_RX1_P
HDMI_RX1_N
HDMI_RXC_P
HDMI_RX0_N
HDMI_RX0_P
HDMI_RXC_N
C56
100nF
CM1G
CEC is also supported, an internal 27K pullup resistor is included in the CM4.
HDMI0
HDMI0_TX2_P
HDMI0_TX2_N
HDMI0_TX1_P
HDMI0_TX1_N
HDMI0_TX0_P
HDMI0_TX0_N
HDMI0_CLK_P
HDMI0_CLK_N
HDMI0_CEC
HDMI0_SCL
HDMI0_SDA
HDMI0_HOTPLUG
HDMI_RX2_P
HDMI_RX2_N
HDMI_RX1_P
HDMI_RX1_N
HDMI_RX0_P
HDMI_RX0_N
HDMI_RXC_P
HDMI_RXC_N
CEC_RX
SCL_RX
SDA_RX
HPD_X
HDMI0_HOTPLUG
Input HDMI1 Hotplug Internally pulled down with a 100K. 5V tolerant.
HDMI0_SDA,SCL
Bidir HDMI1 SDA Internally pulled up with a 1.8K. 5V tolerant
Raspberry Pi Compute Module 4
CM1M
Boot,Reset,Power Control
CM4_EN
GLOBAL_EN
nRPIBOOT
nEXTRST
RUN_PG
AnalogIP0
AnalogIP1
GLOBAL_EN (Input)
Drive low to power off CM4. Internally pulled up with a 100K to +5V
nRPI_BOOT (Input)
During boot if this pin is low booting from eMMC will be stopped and booting will be transferred to rpi boot which is via
nEXTRST (Output)
Driven low during reset
Driven high (CM4_3.3V) once CM4 CPU has started to boot
RUN_PG
Bidirectional pin. Internally pulled up to +3.3V via 10K
>Input
Can be driven low (via a 220R resistor) to Reset the CM4 CPU.
Ouput >
Output a high signals Power Good and CPU running.
Analog IP0,IP1
Analog input of the MAX7704. Typically connected to CC pin of Type C power connector
Raspberry Pi Compute Module 4
CM1L
Pi_nLED_Activity
Low Active Pi Activity LED. 20mA Max 5V tolerant (VOL<0.4V). (this is the signal that drives the Green LED on the Raspberry Pi 4, Model B)
LEDs
Pi_nLED_Activity
PI_LED_nPWR
PI_LED_nPWR
Low active Output to drive Power On LED. This signal needs to be buffered.
Raspberry Pi Compute Module 4
CM1A
GPIO load 50mA in total
GPIO
GPIO_VREF
CM4_SDA1
CM4_SCL1
SDA1
SCL1
GPCLK0
GPIO2
GPIO3
GPIO4
GPIO17
GPIO27
GPIO22
SPI0_MOSI
SPI0_MISO
SPI0_CLK
GPIO10
GPIO9
GPIO11
GPIO5
GPIO6
GPIO19
GPIO26
GPIO14
GPIO15
GPIO18
GPIO23
GPIO24
GPIO25
GPIO8
GPIO7
GPIO16
GPIO20
GPIO21
TXD0
RXD0
CM4_TX
CM4_RX
SPI0_CE0
SPI0_CE1
Raspberry Pi Compute Module 4
CM1C
VCC_MIC
VIN 4.75V-5.25V (*Max 6V)
Power Required 5V 2A (10W) Avg
Power
+5V (Input)
Raspberry Pi Compute Module 4
Title
Size
A4
Number
Revision
Date: 4/14/2022
Sheet of
File: \\..\CM4.SchDoc
Drawn By:

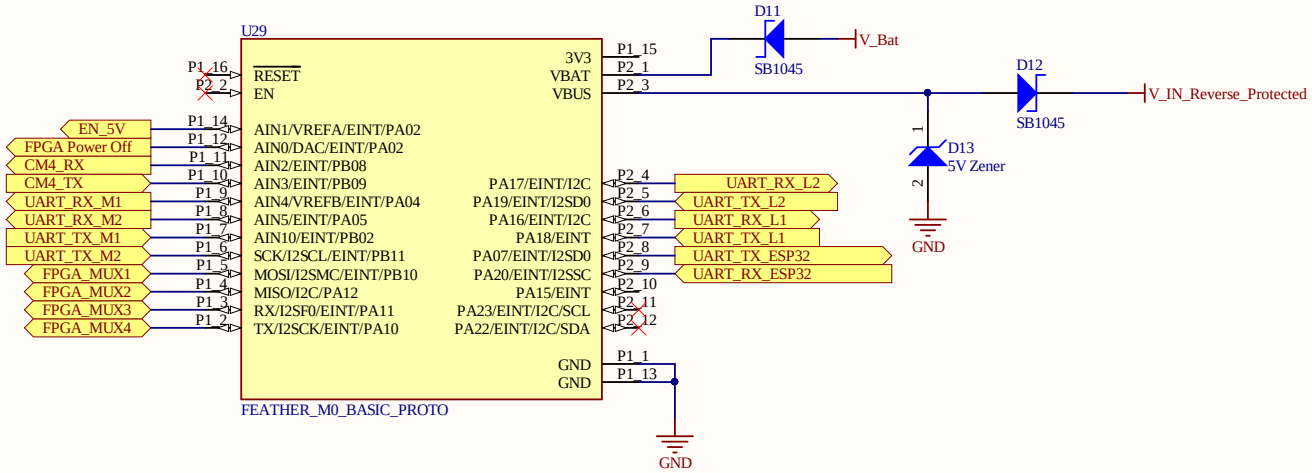

Title		
Size A4	Number	Revision
Date: 4/14/2022		Sheet of
File: \\..\FPGA_Multiplexer.SchDoc		Drawn By:

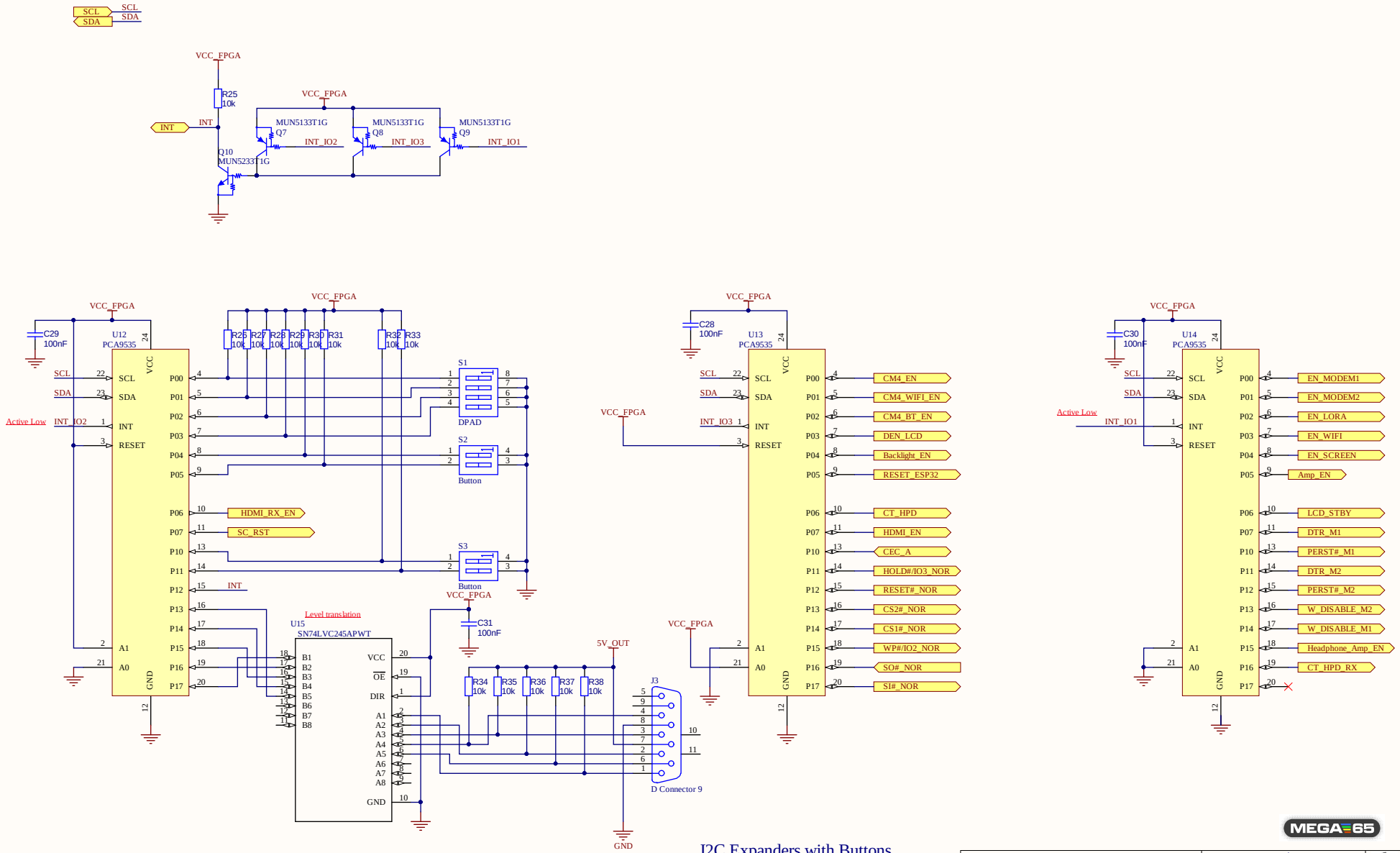

I2C Expanders with Buttons

Title *			* * * Bedford Park SA *
Size: A3	Number: *	Drawn By: *	
Date: 4/14/2022	Revision: *	Sheet * of *	
File: \\TAVU\TAVU Outside Projects\2022\04-2022 Megaphone PCB\Altium\V1.0.0\I2C Expanders.SchDoc			

Lachlan McHaffie

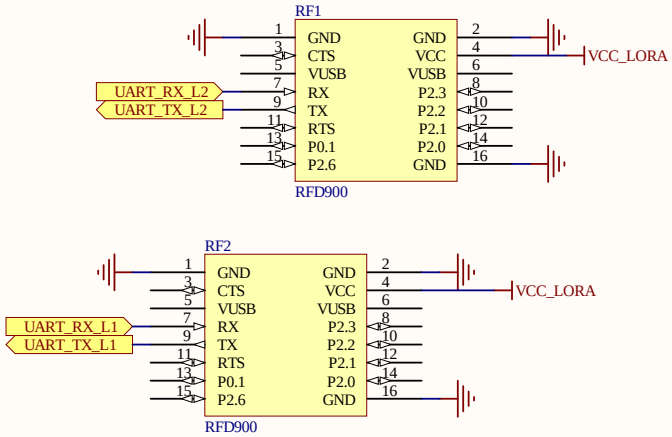

Title * LoRa Modules			
Size: A4	Number: *	Drawn By: *	
Date: 4/14/2022	Revision: *	Sheet * of *	
File: \\TAVU\TAVU Outside Projects\2022\04-2022 Megaphone PCB\Altium\V1.0.0\LoRa Radio.SchDoc			Lachlan McDonald

11 17

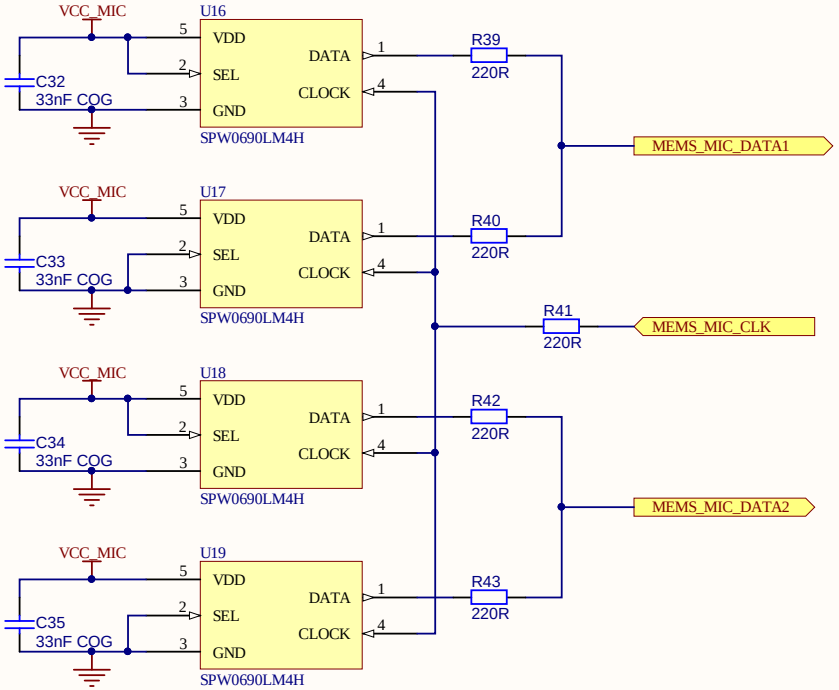

Title *			* * * * *
Size: A4	Number: *	Drawn By: *	
Date: 4/14/2022	Revision: *	Sheet * of *	16 17
File: \\TAVU\TAVU Outside Projects\2022\04-2022 Megaphone PCB\Altium\V1.0.0\MEMS MICs.SchDoc			Lachlan McDonald

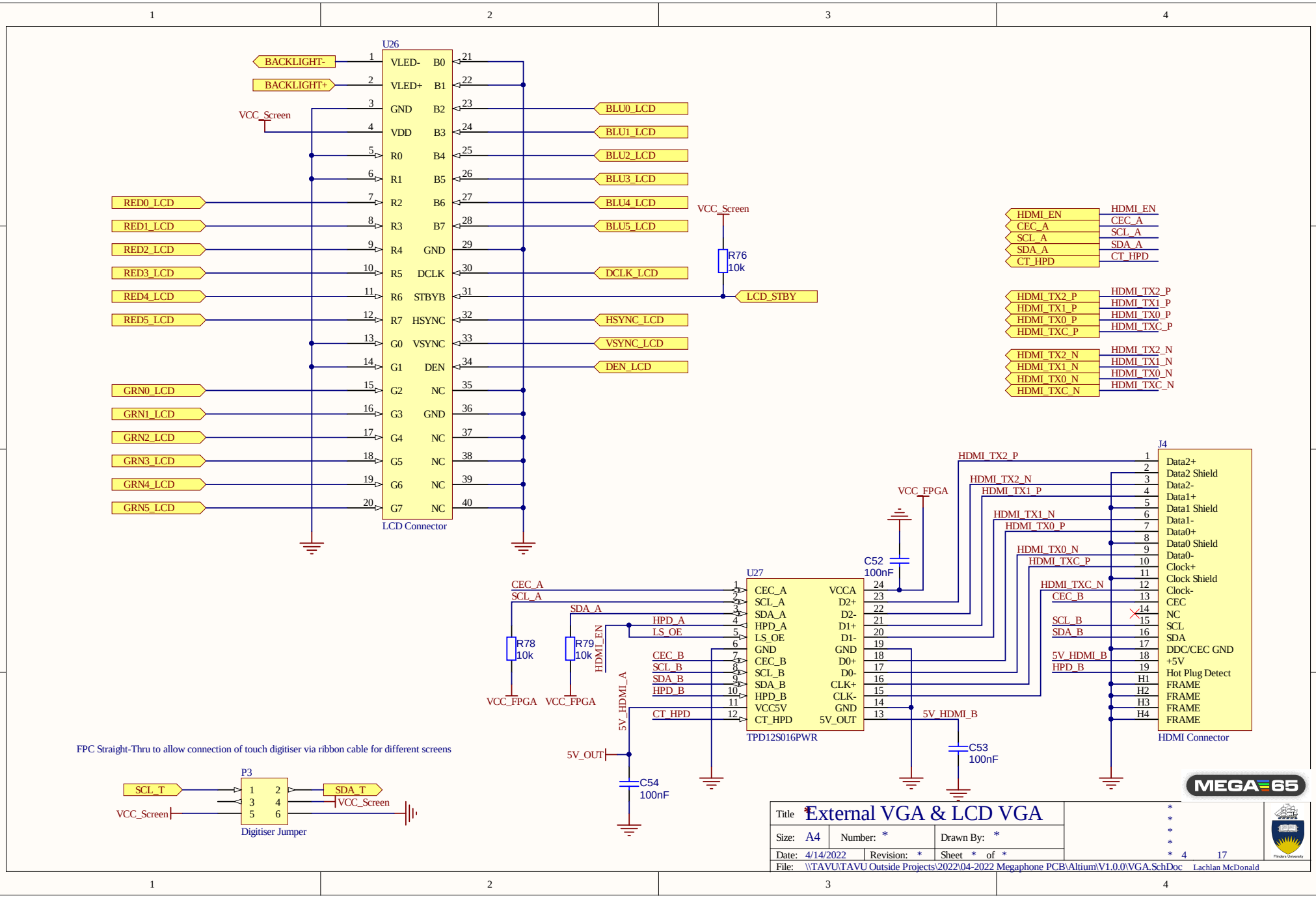
U26
BACKLIGHT-
BACKLIGHT+
VCC_Screen
VLED- B0
VLED+ B1
GND B2
VDD B3
R0 B4
R1 B5
R2 B6
R3 B7
R4 GND
R5 DCLK
R6 STBYB
R7 HSYNC
G0 VSYNC
G1 DEN
G2 NC
G3 GND
G4 NC
G5 NC
G6 NC
G7 NC
RED0_LCD
RED1_LCD
RED2_LCD
RED3_LCD
RED4_LCD
RED5_LCD
GRN0_LCD
GRN1_LCD
GRN2_LCD
GRN3_LCD
GRN4_LCD
GRN5_LCD
BLU0_LCD
BLU1_LCD
BLU2_LCD
BLU3_LCD
BLU4_LCD
BLU5_LCD
DCLK_LCD
HSYNC_LCD
VSYNC_LCD
DEN_LCD
LCD_STBY
R76
10k
LCD Connector
HDMI_EN
CEC_A
SCL_A
SDA_A
CT_HPD
HDMI_TX2_P
HDMI_TX1_P
HDMI_TX0_P
HDMI_TXC_P
HDMI_TX2_N
HDMI_TX1_N
HDMI_TX0_N
HDMI_TXC_N
J4
Data2+
Data2 Shield
Data2-
Data1+
Data1 Shield
Data1-
Data0+
Data0 Shield
Data0-
Clock+
Clock Shield
Clock-
CEC
NC
SCL
SDA
DDC/CEC GND
+5V
Hot Plug Detect
FRAME
FRAME
FRAME
FRAME
HDMI Connector
VCC_FPGA
C52
100nF
U27
CEC_A
SCL_A
SDA_A
HPD_A
LS_OE
GND
CEC_B
SCL_B
SDA_B
HPD_B
VCC5V
CT_HPD
VCCA
D2+
D2-
D1+
D1-
GND
D0+
D0-
CLK+
CLK-
GND
5V_OUT
TPD12S016PWR
R78
10k
R79
10k
HDMI_EN
5V_HDMI_A
5V_OUT
C54
100nF
5V_HDMI_B
C53
100nF
FPC Straight-Thru to allow connection of touch digitiser via ribbon cable for different screens
P3
SCL_T
SDA_T
VCC_Screen
Digitiser Jumper
MEGA65
Title External VGA & LCD VGA
Size: A4
Number:
Drawn By:
Date: 4/14/2022
Revision:
Sheet 4 of 17
File: \\TAVU\TAVU Outside Projects\2022\04-2022 Megaphone PCB\Altium\V1.0.0\VGA.SchDoc
Lachlan McDonald