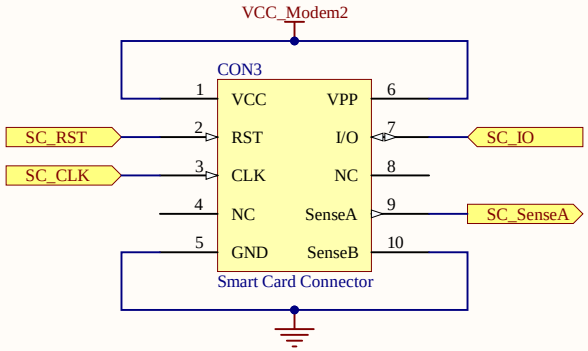

Title **TITLE**			*Flinders University* *College of Science & Engineering* *Engineering Services Room 3.22* *1284 South Rd* *SA 5042*
Size: A4	Number: A4	Drawn By: D Kleiss	
Date: 12.12.2020.	Revision: 1	Sheet 1 of 1	
File: D:\projects\lrnas\PCB_designs\Altium\megaphone-r2-nohistory\SD & SMART CARD.SchDoc			

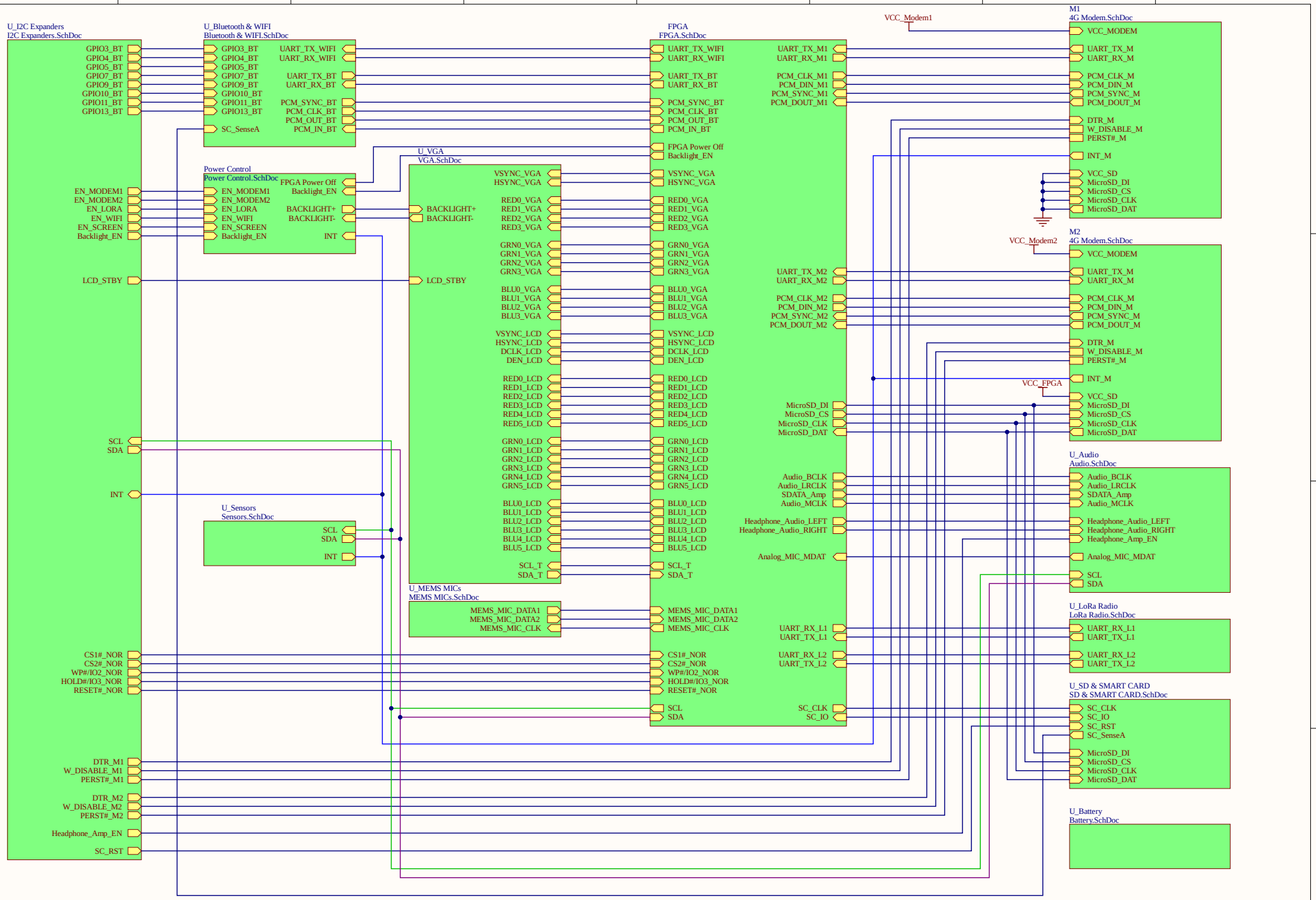

Title	**Mega Phone**		*Flinders University* *College of Science & Engineering* *Engineering Services Room 3.22* *Bedford Park SA* *SA 5042*
Size: A3	Number: A4284	Drawn By: D Kleiss	
Date: 12.12.2020.	Revision: 1	Sheet 1 of 1	
File: D:\projects\lrnas\PCB_designs\Altium\megaphone-r2-nohistory\MEGAphone Overview.SchDoc			

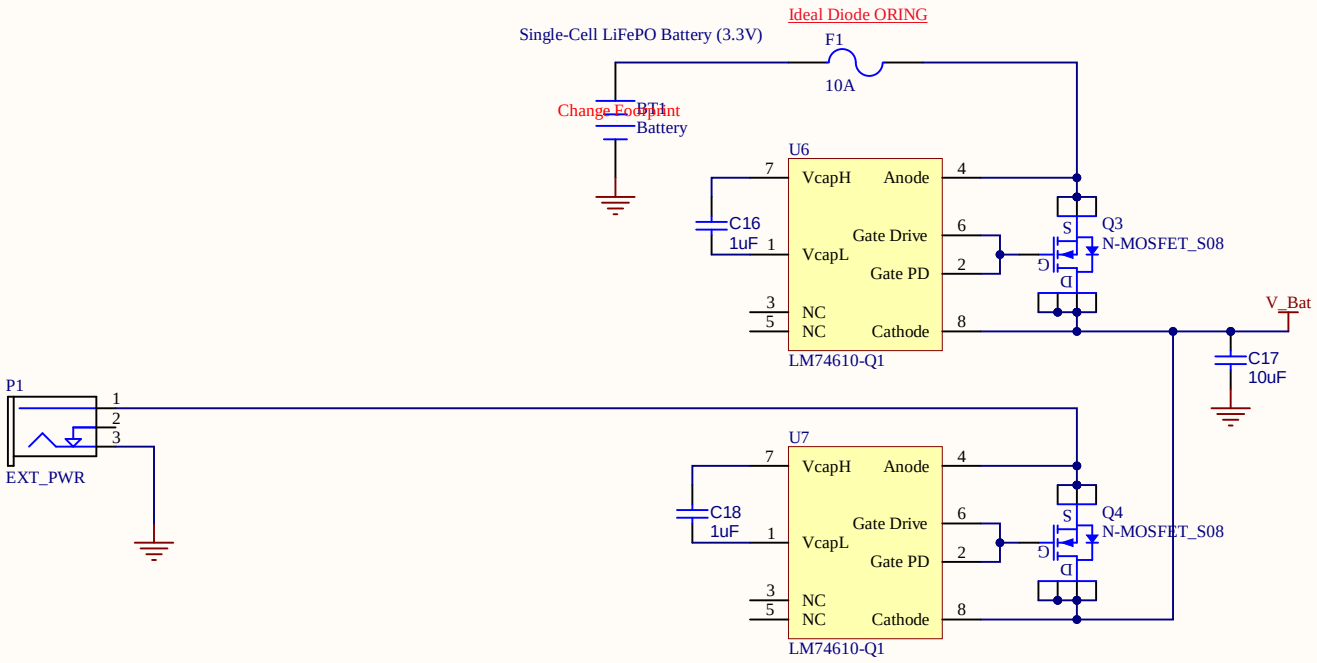

Title **TITLE**			*Flinders University* *College of Science & Engineering* *Engineering Services Room 3.22* *1284 South Rd* *SA 5042*
Size: A4	Number: A4	Drawn By: D Kleiss	
Date: 12.12.2020.	Revision: 1	Sheet 1 of 1	
File: D:\projects\lrnas\PCB_designs\Altium\megaphone-r2-nohistory\Battery.SchDoc			

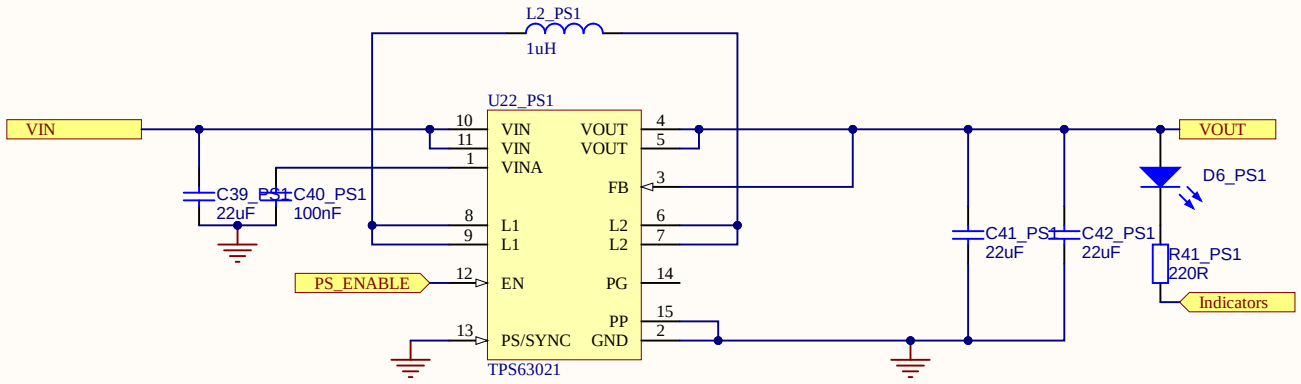

Title **TITLE**			*Flinders University* *College of Science & Engineering* *Engineering Services Room 3.22* *1284 South Rd* *SA 5042*
Size: A4	Number: A4	Drawn By: D Kleiss	
Date: 12.12.2020.	Revision: 1	Sheet 1 of 1	
File: D:\projects\lrnas\PCB_designs\Altium\megaphone-r2-nohistory\PowerSupply.SchDoc			

Sallen-Key Butterworth Low Pass 4th Order Filter

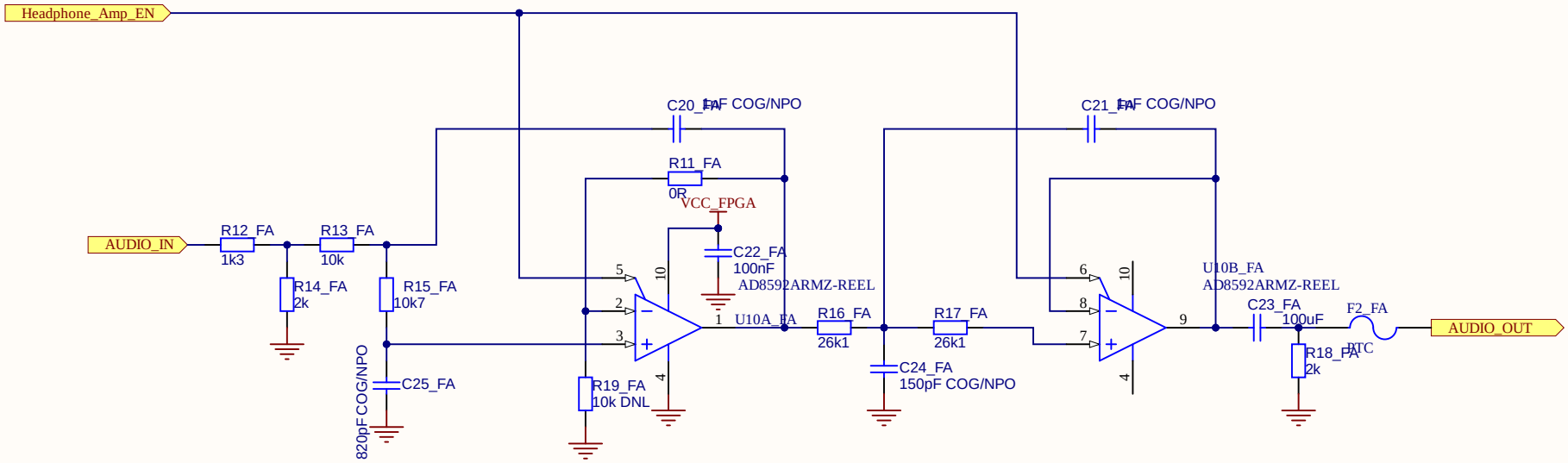

Title	TITLE		Flinders University College of Science & Engineering Engineering Services Room 3.22 1284 South Rd SA 5042
Size: A4	Number: A4	Drawn By: D Kleiss	
Date: 12.12.2020.	Revision: 1	Sheet 1 of 1	
File: D:\projects\lrnas\PCB_designs\Altium\megaphone-r2-nohistory\Headphone Filter.SchDoc			

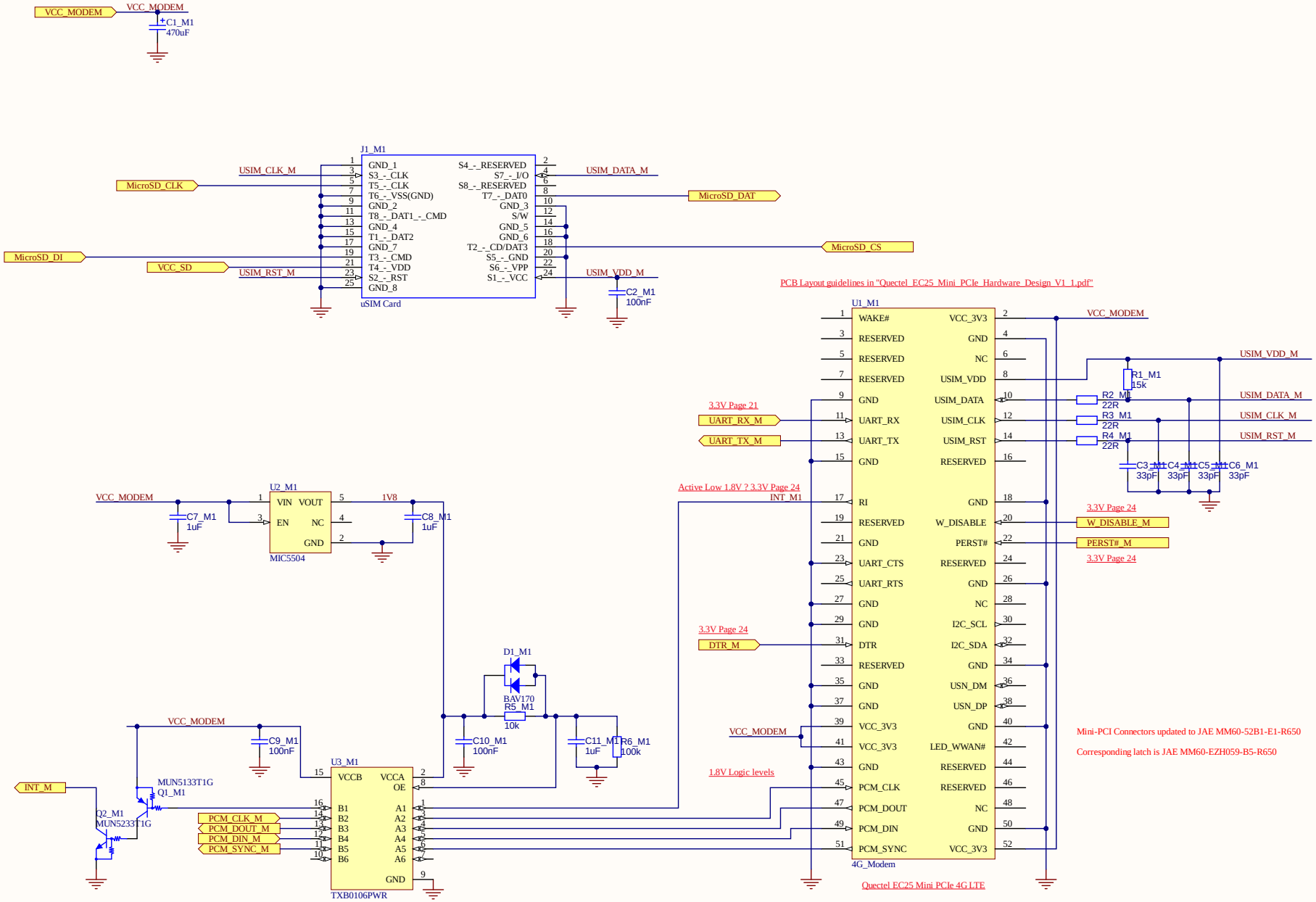

Title	TITLE		Flinders University College of Science & Engineering Engineering Services Room 3.22 Bedford Park SA SA 5042
Size: A3	Number: A4	Drawn By: D Kleiss	
Date: 12.12.2020.	Revision: 1	Sheet 1 of 1	
File: D:\projects\lrnas\PCB_designs\Altium\megaphone-r2-nohistory\4G Modem.SchDoc			

6 17 Lachlan McDonald

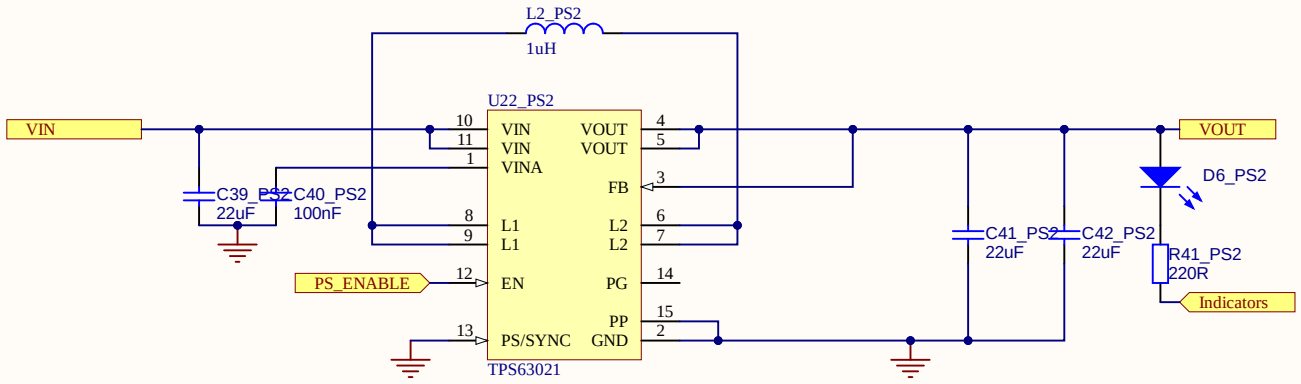

Title **TITLE**			*Flinders University* *College of Science & Engineering* *Engineering Services Room 3.22* *1284 South Rd* *SA 5042*
Size: A4	Number: A4	Drawn By: D Kleiss	
Date: 12.12.2020.	Revision: 1	Sheet 1 of 1	
File: D:\projects\lrnas\PCB_designs\Altium\megaphone-r2-nohistory\PowerSupply.SchDoc			

Sallen-Key Butterworth Low Pass 4th Order Filter

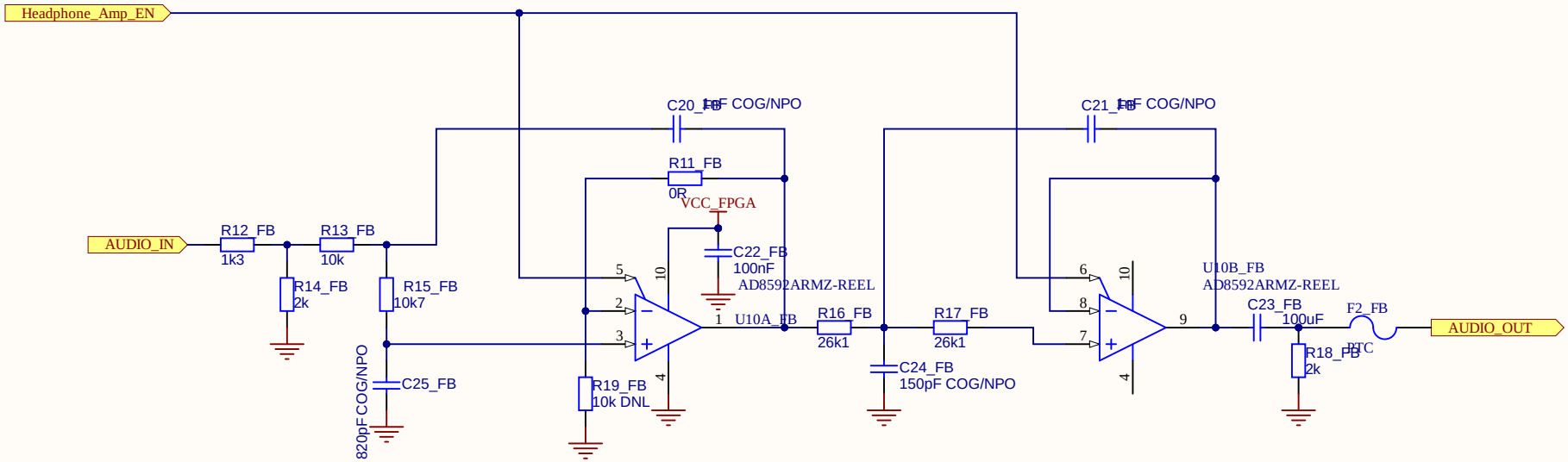

Title	TITLE		Flinders University College of Science & Engineering Engineering Services Room 3.22 1284 South Rd SA 5042
Size: A4	Number: A4	Drawn By: D Kleiss	
Date: 12.12.2020.	Revision: 1	Sheet 1 of 1	
File: D:\projects\lrnas\PCB_designs\Altium\megaphone-r2-nohistory\Headphone Filter.SchDoc			

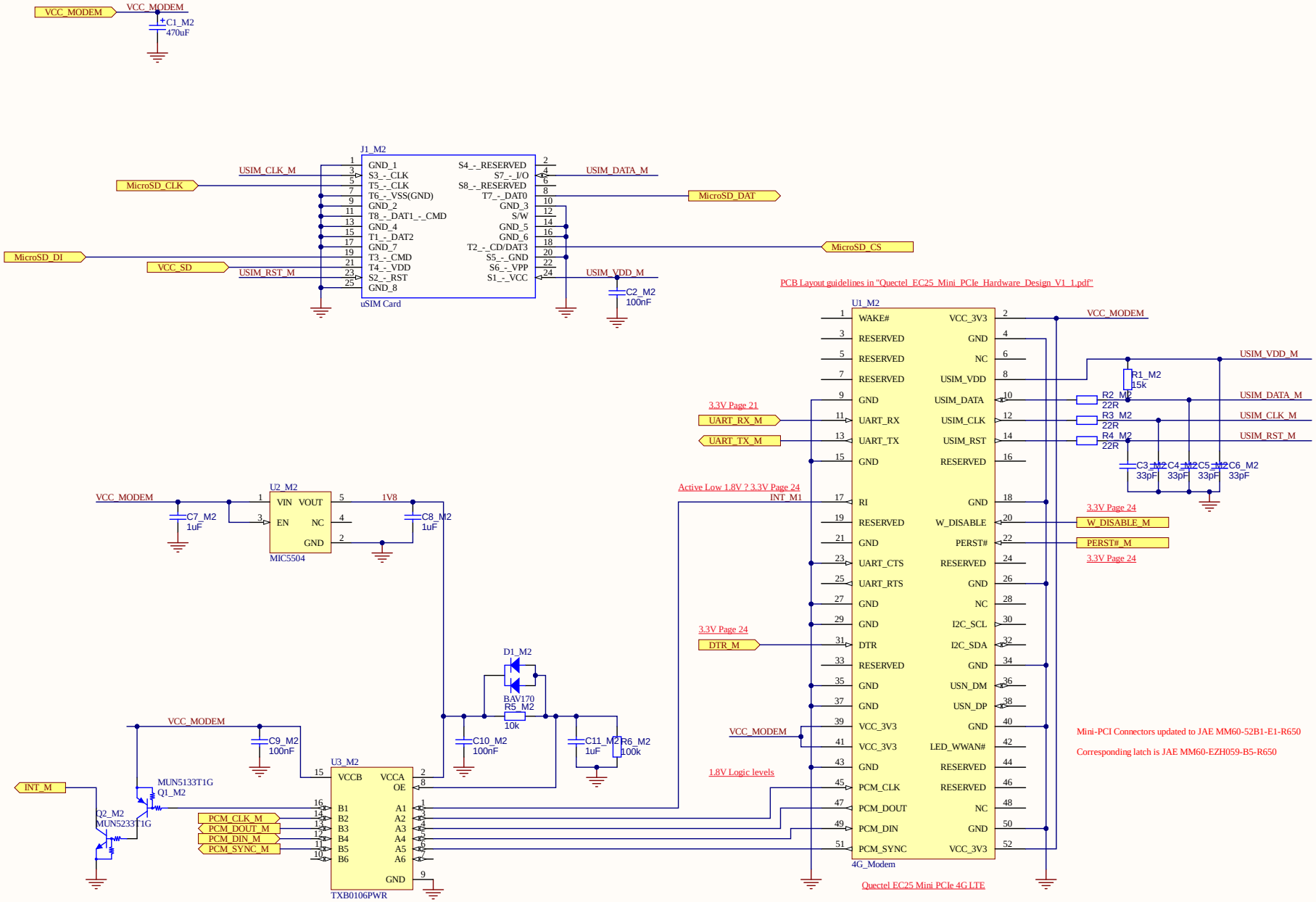

Title	TITLE		Flinders University College of Science & Engineering Engineering Services Room 3.22 Bedford Park SA SA 5042
Size: A3	Number: A4	Drawn By: D Kleiss	
Date: 12.12.2020.	Revision: 1	Sheet 1 of 1	
File: D:\projects\lrnas\PCB_designs\Altium\megaphone-r2-nohistory\4G Modem.SchDoc			

6 17
Lachlan McDonald

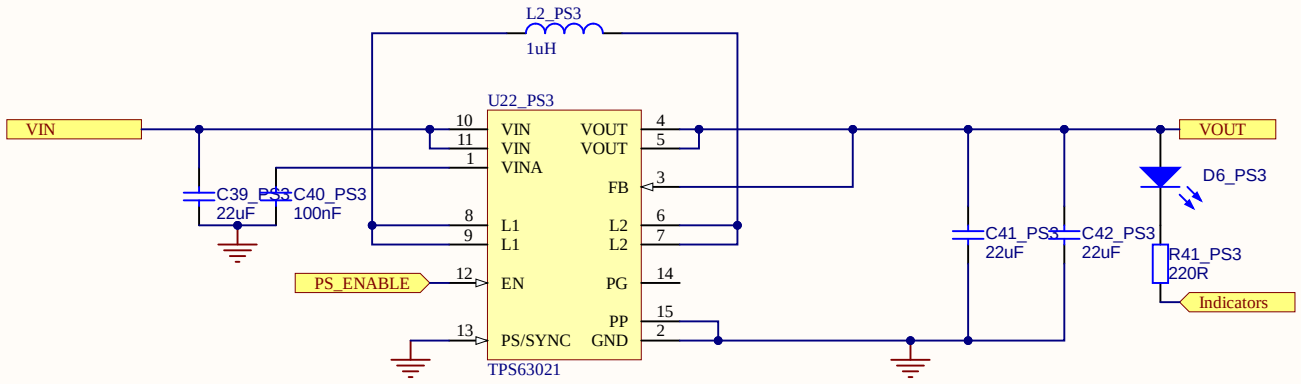

Title **TITLE**			*Flinders University* *College of Science & Engineering* *Engineering Services Room 3.22* *1284 South Rd* *SA 5042*
Size: A4	Number: A4	Drawn By: D Kleiss	
Date: 12.12.2020.	Revision: 1	Sheet 1 of 1	
File: D:\projects\lrnas\PCB_designs\Altium\megaphone-r2-nohistory\PowerSupply.SchDoc			

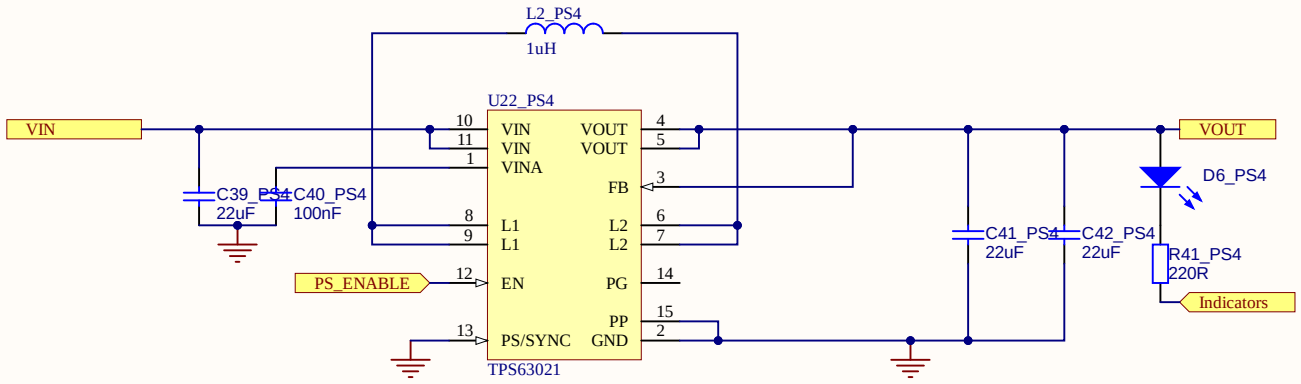

Title **TITLE**			*Flinders University* *College of Science & Engineering* *Engineering Services Room 3.22* *1284 South Rd* *SA 5042*
Size: A4	Number: A4	Drawn By: D Kleiss	
Date: 12.12.2020.	Revision: 1	Sheet 1 of 1	
File: D:\projects\lrnas\PCB_designs\Altium\megaphone-r2-nohistory\PowerSupply.SchDoc			

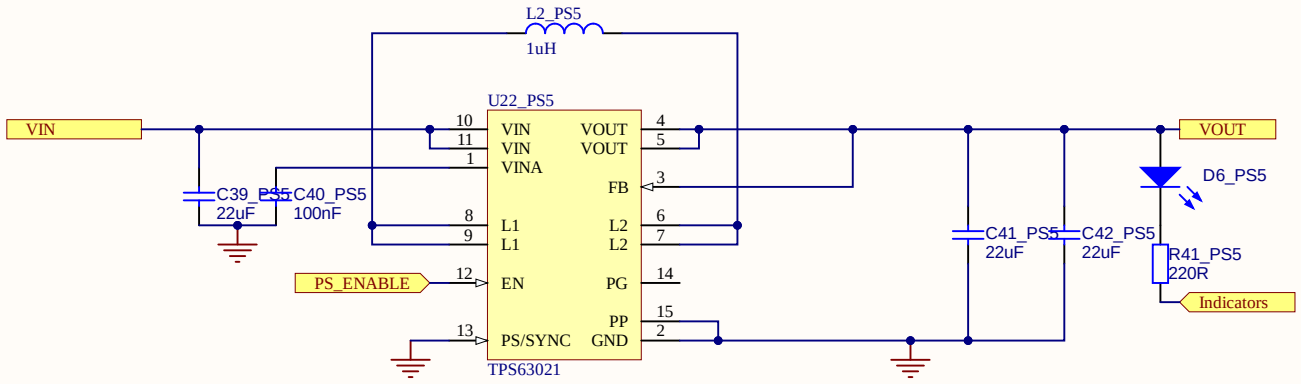

Title **TITLE**			*Flinders University* *College of Science & Engineering* *Engineering Services Room 3.22* *1284 South Rd* *SA 5042*
Size: A4	Number: A4	Drawn By: D Kleiss	
Date: 12.12.2020.	Revision: 1	Sheet 1 of 1	
File: D:\projects\lrnas\PCB_designs\Altium\megaphone-r2-nohistory\PowerSupply.SchDoc			

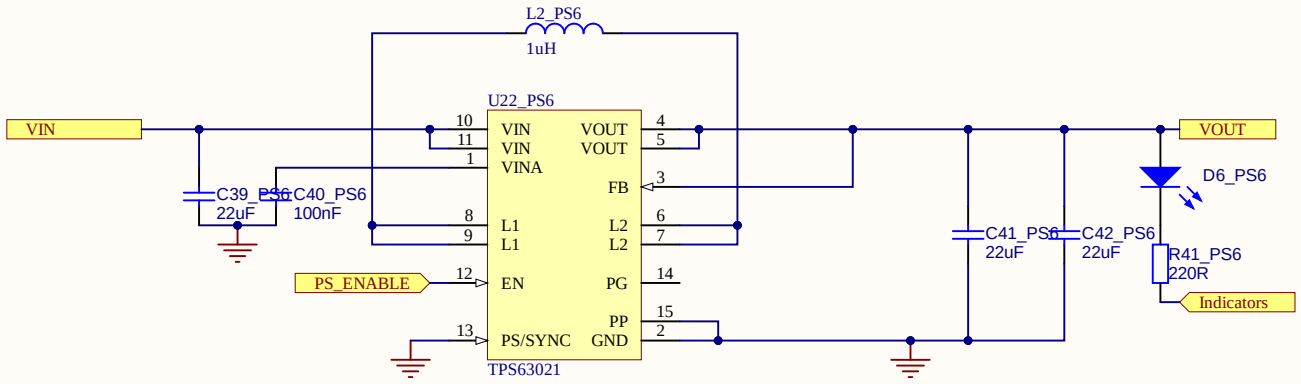

Title **TITLE**			*Flinders University* *College of Science & Engineering* *Engineering Services Room 3.22* *1284 South Rd* *SA 5042*
Size: A4	Number: A4	Drawn By: D Kleiss	
Date: 12.12.2020.	Revision: 1	Sheet 1 of 1	
File: D:\projects\lrnas\PCB_designs\Altium\megaphone-r2-nohistory\PowerSupply.SchDoc			

FPGA Board Is Trenz TE0725-03-100-2CF

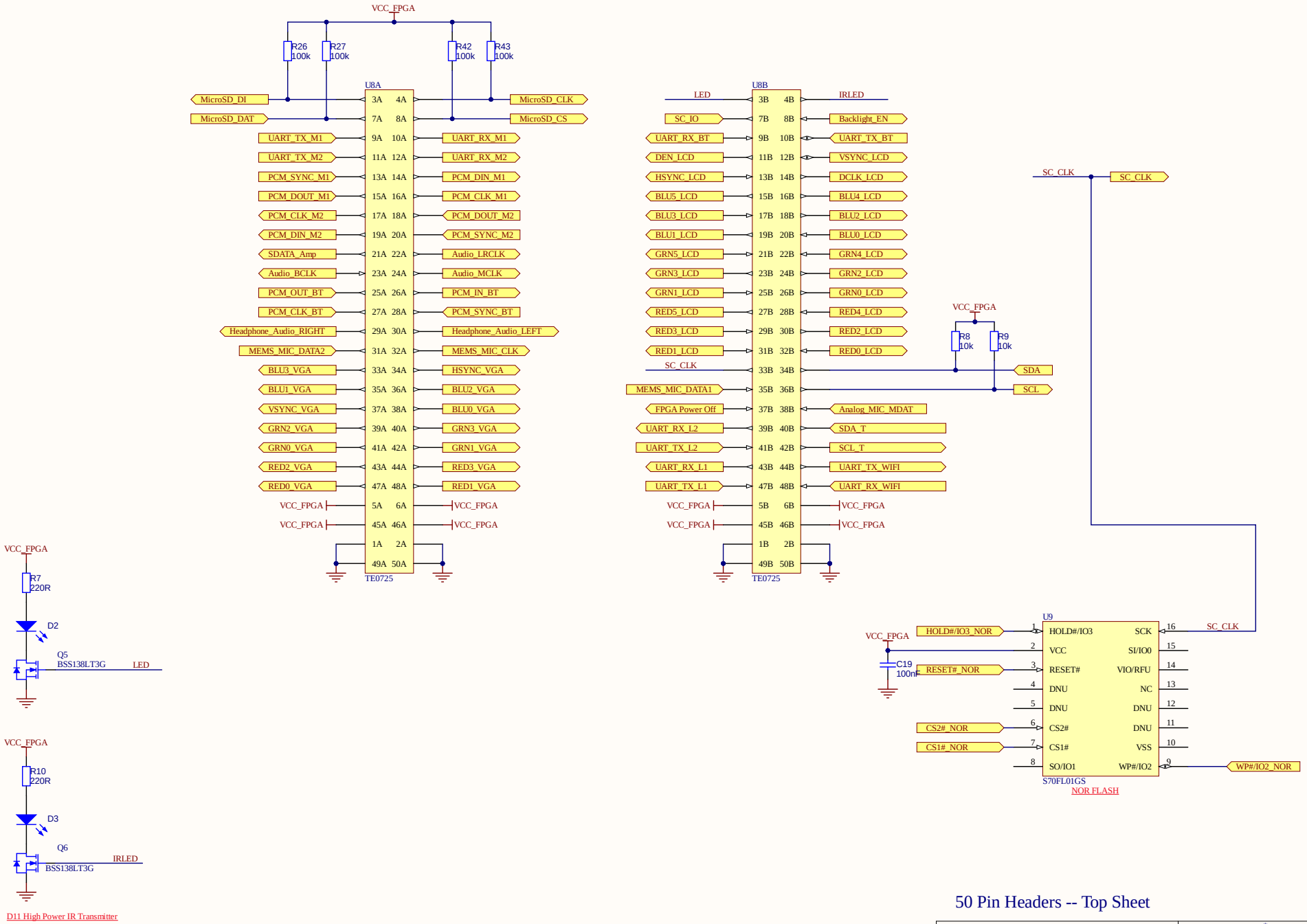

50 Pin Headers -- Top Sheet

Title	*MEGAPHONE FPGA*		* * * Bedford Park SA *
Size: A3	Number: *	Drawn By: *	
Date: 12.12.2020.	Revision: *	Sheet 2 of *	
File: D:\projects\lrnas\PCB_designs\Altium\megaphone-r2-nohistory\FPGA.SchDoc			

Lachlan McDonald

Cannot open file S:\CSE-CSEM esg\Electro Technical Team\Superceded\Documents\Altium\Step Models\Connectors\CUI\CUI_SJ-43515TS-SMT-TR\Mating TRRS.bmp

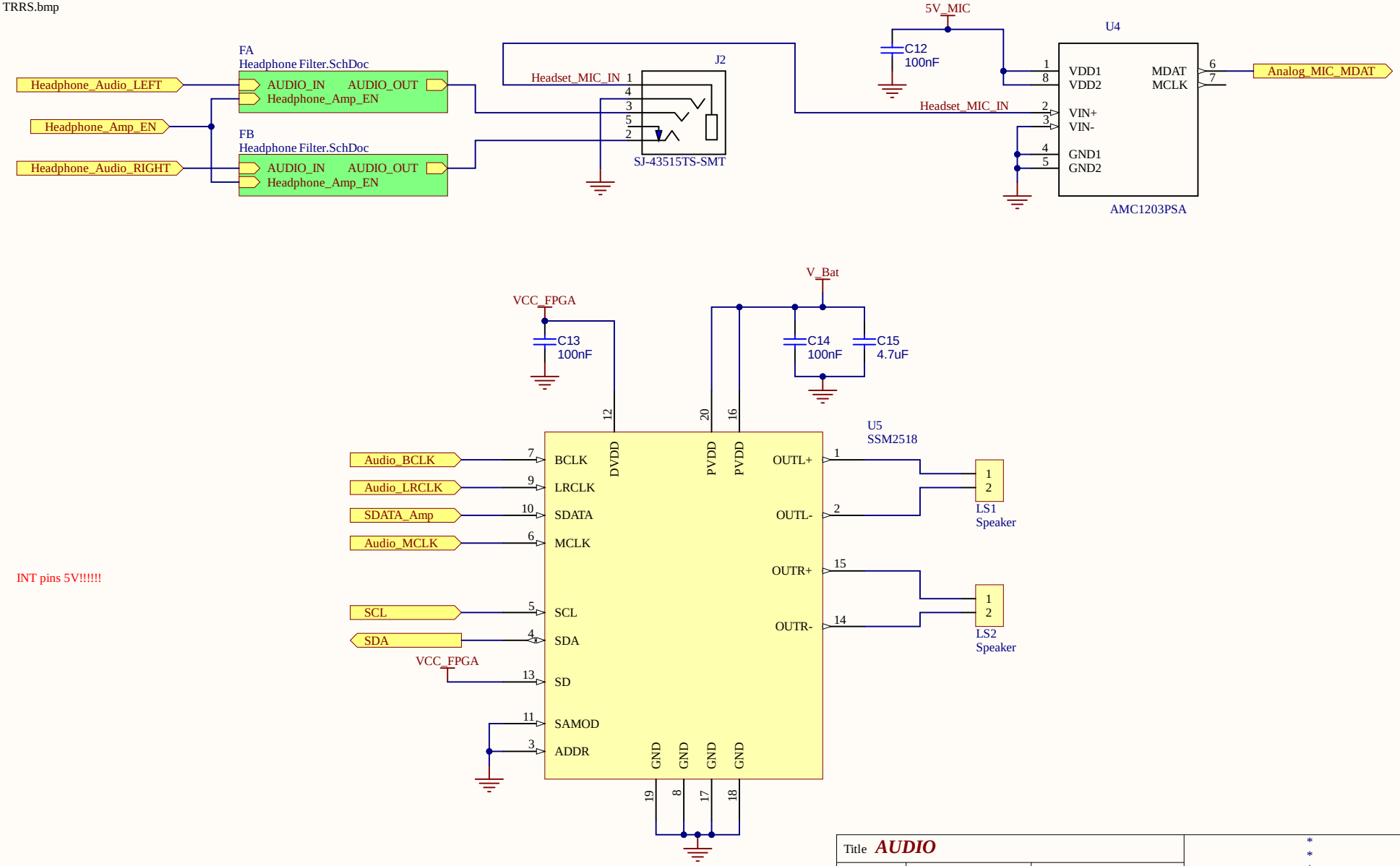

INT pins 5V!!!!!!

Title **AUDIO**			* * * * * 7 17
Size: A4	Number: *	Drawn By: D KLEISS	
Date: 12.12.2020.	Revision: 1	Sheet 3 of 15	
File: D:\projects\lrnas\PCB_designs\Altium\megaphone-r2-nohistory\Audio.SchDoc			

These transistors isolate VCC_MIC from the I2C bus when the accelerometer isn't receiving power

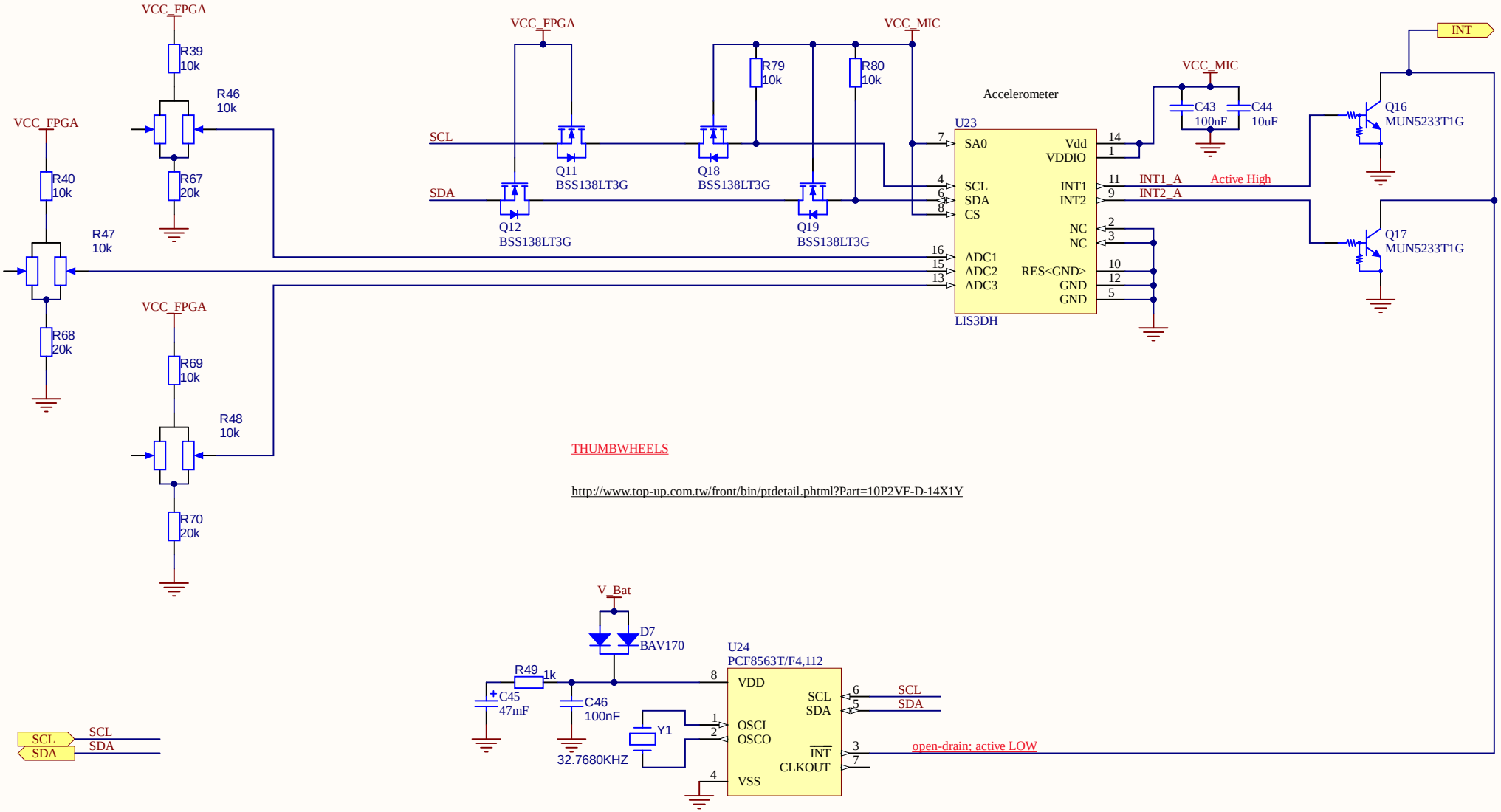

Title	**MEGAPHONE Sensors**		*Flinders University* *College of Science & Engineering* *Engineering Services Room 3.22* *1284 South Rd* *SA 5042*
Size: A4	Number: A4284	Drawn By: D Kleiss	
Date: 12.12.2020.	Revision: 1	Sheet 5 of 15	
File: D:\projects\lrnas\PCB_designs\Altium\megaphone-r2-nohistory\Sensors.SchDoc			

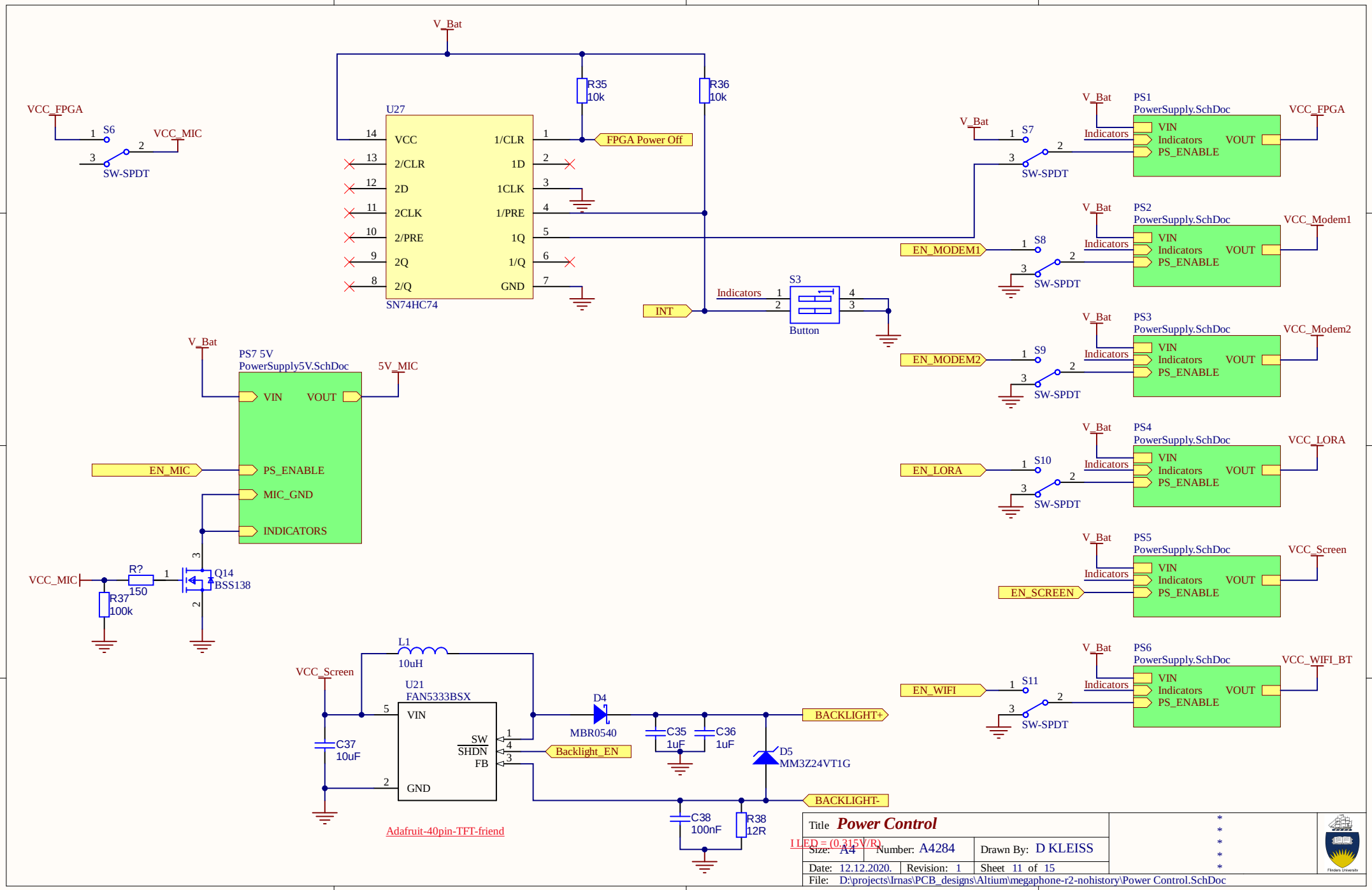
V_Bat
R35
10k
R36
10k
U27
SN74HC74
VCC
2/CLR
2D
2CLK
2/PRE
2Q
2/Q
1/CLR
1D
1CLK
1/PRE
1Q
1/Q
GND
FPGA Power Off
VCC_FPGA
S6
SW-SPDT
VCC_MIC
INT
Indicators
S3
Button
PS1
PS2
PS3
PS4
PS5
PS6
PowerSupply.SchDoc
VIN
Indicators
PS_ENABLE
VOUT
S7
S8
S9
S10
S11
EN_MODEM1
EN_MODEM2
EN_LORA
EN_SCREEN
EN_WIFI
VCC_Modem1
VCC_Modem2
VCC_LORA
VCC_Screen
VCC_WIFI_BT
PS7 5V
PowerSupply5V.SchDoc
5V_MIC
EN_MIC
MIC_GND
INDICATORS
R?
150
R37
100k
Q14
BSS138
L1
10uH
U21
FAN5333BSX
SW
SHDN
FB
C37
10uF
D4
MBR0540
C35
1uF
C36
1uF
D5
MM3Z24VT1G
BACKLIGHT+
BACKLIGHT-
Backlight_EN
C38
100nF
R38
12R
Adafruit-40pin-TFT-friend
I LED = (0.315V/R)
Title Power Control
Size: A4
Number: A4284
Drawn By: D KLEISS
Date: 12.12.2020.
Revision: 1
Sheet 11 of 15
File: D:\projects\lrnas\PCB_designs\Altium\megaphone-r2-nohistory\Power Control.SchDoc

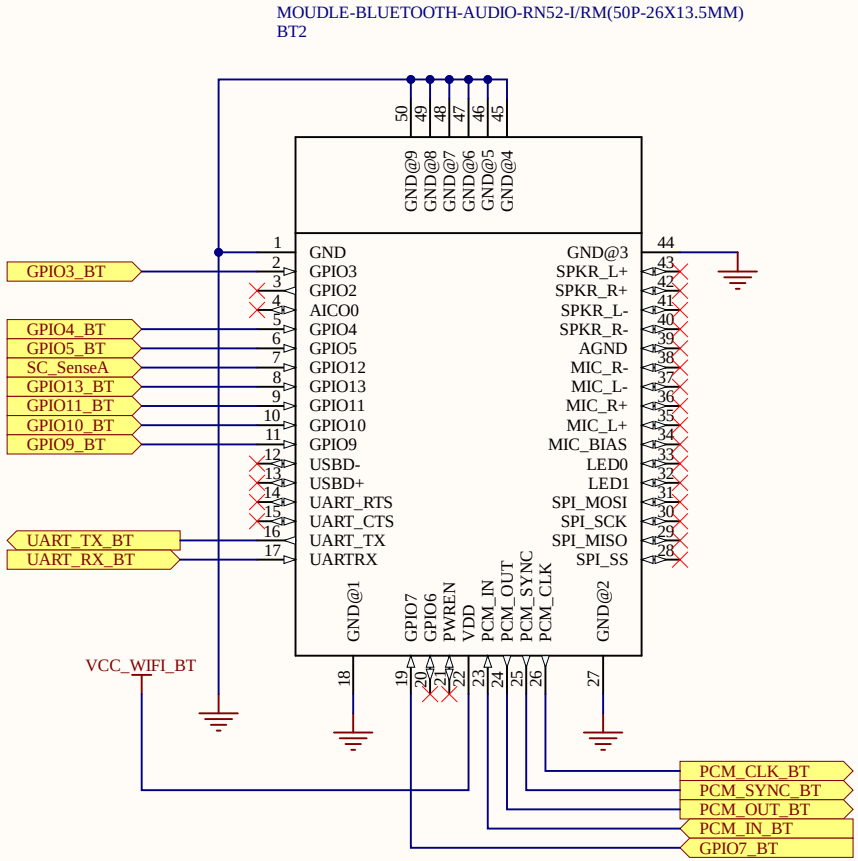

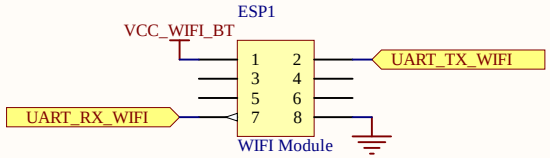

Title	***BLUETOOTH & WiFi***		
Size: A4	Number: *	Drawn By: *	
Date: 12.12.2020.	Revision: *	Sheet * of *	
File: D:\projects\lrnas\PCB_designs\Altium\megaphone-r2-nohistory\Bluetooth & WIFI.SchDoc			Lachlan McDonald

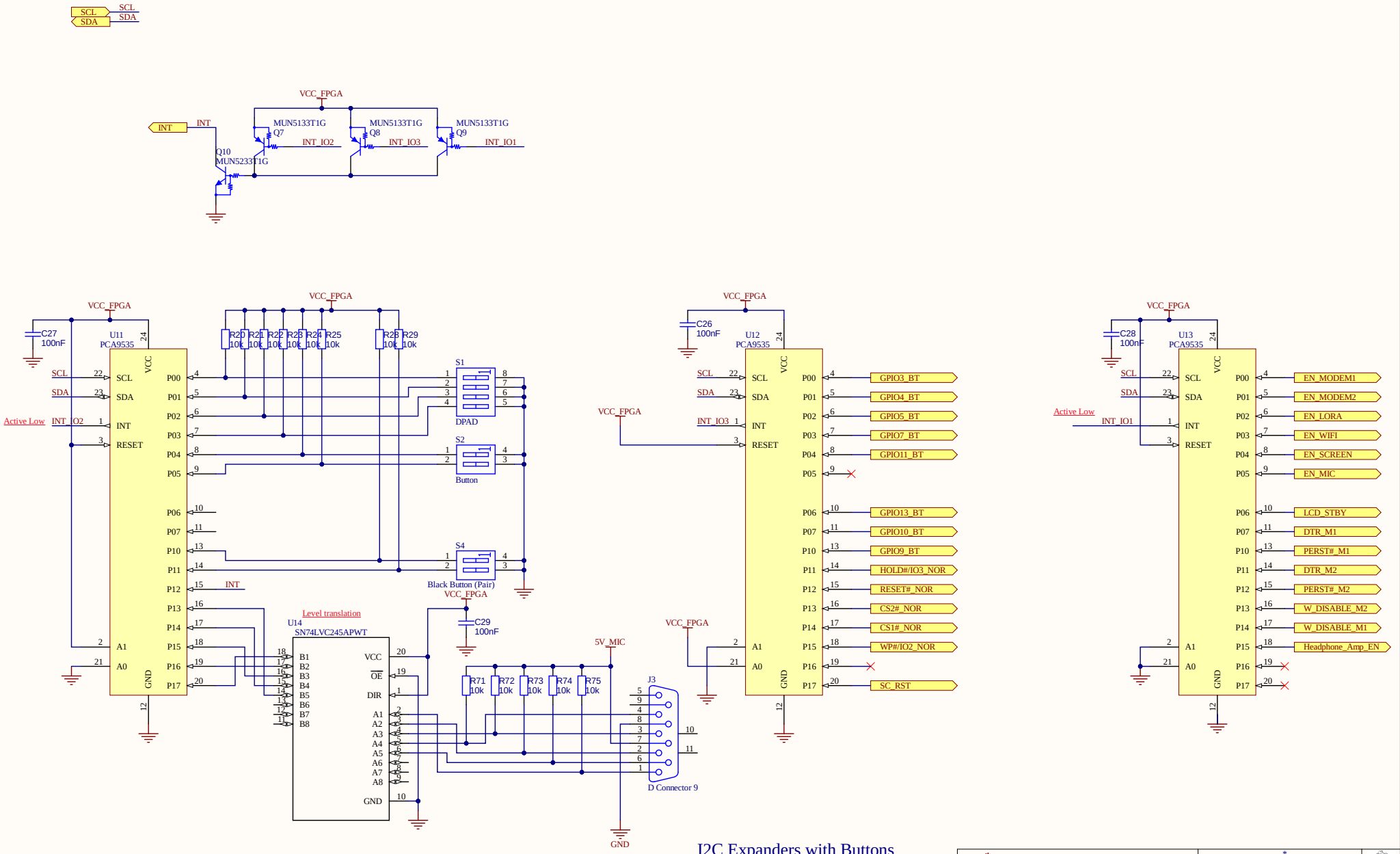

I2C Expanders with Buttons

Title *			* * * Bedford Park SA *
Size: A3	Number: *	Drawn By: *	
Date: 12.12.2020.	Revision: *	Sheet * of *	
File: D:\projects\lrnas\PCB_designs\Altium\megaphone-r2-nohistory\I2C Expanders.SchDoc			

Lachlan Marnham

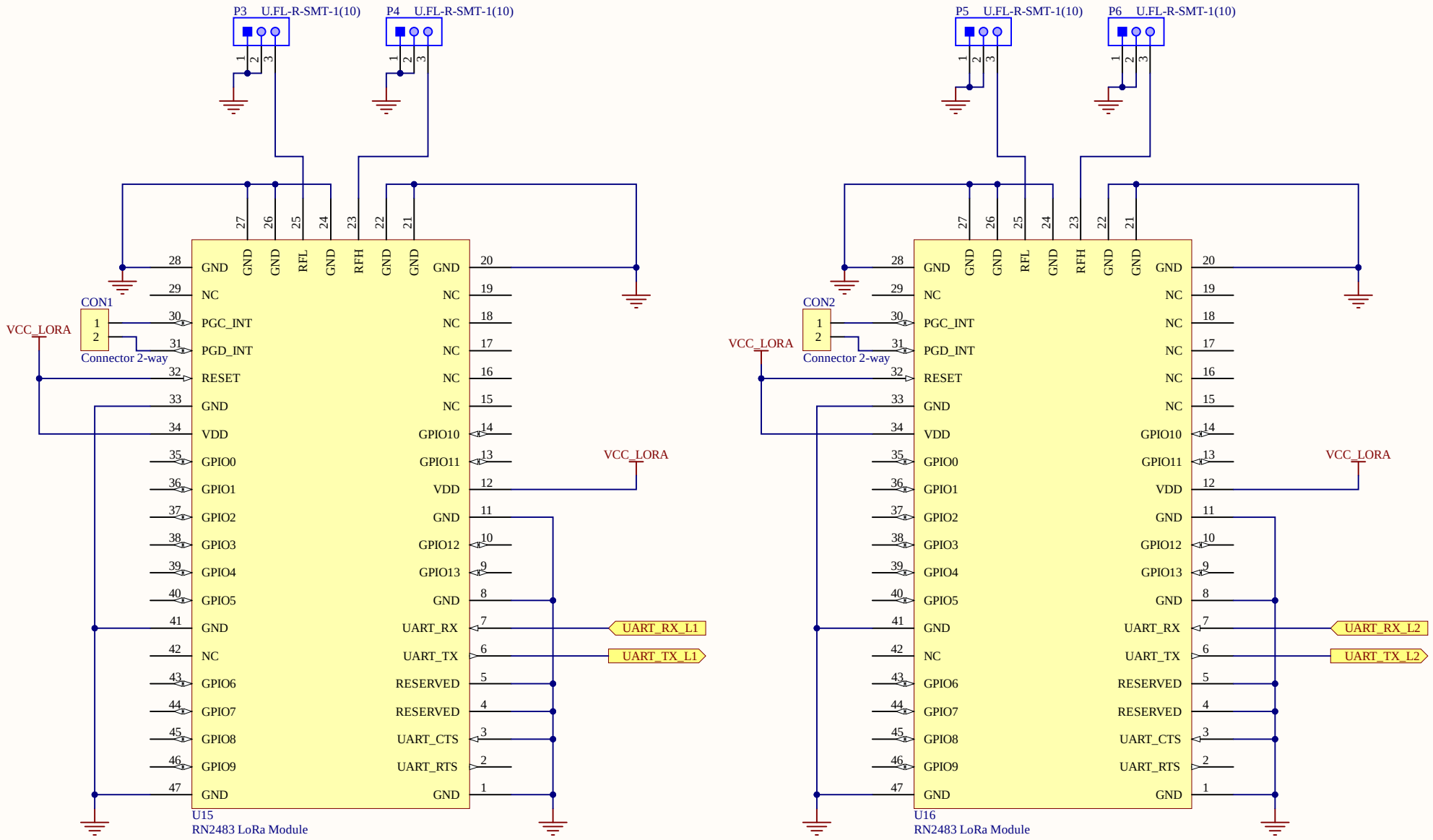

Title * LoRa Modules			* * * * *
Size: A4	Number: *	Drawn By: *	
Date: 12.12.2020.	Revision: *	Sheet * of *	11 17
File: D:\projects\lrnas\PCB_designs\Altium\megaphone-r2-nohistory\LoRa Radio.SchDoc			Lachlan McDonald

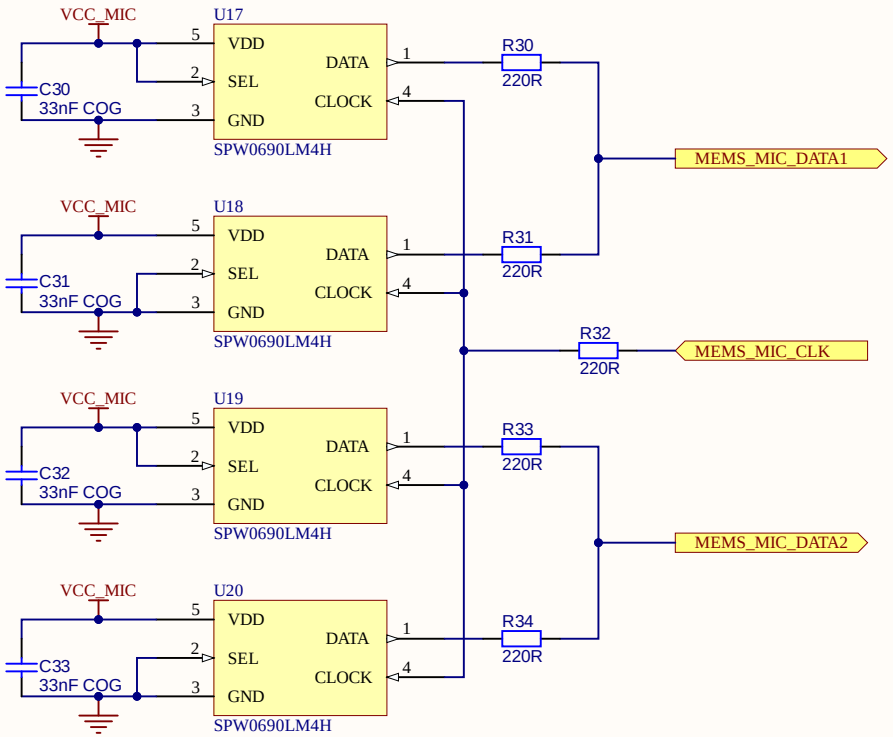

Title *			* * * * *
Size: A4	Number: *	Drawn By: *	
Date: 12.12.2020.	Revision: *	Sheet * of *	16 17
File: D:\projects\lrnas\PCB_designs\Altium\megaphone-r2-nohistory\MEMS MICs.SchDoc			Lachlan McDonald

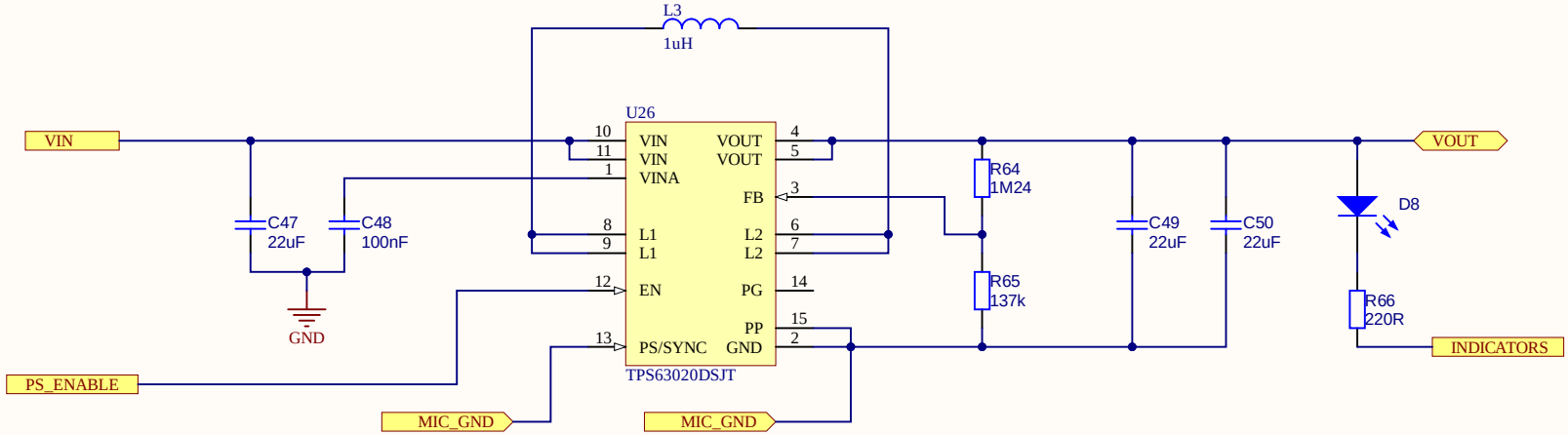

Title		
Size A4	Number	Revision
Date: 12.12.2020		Sheet of
File: D:\projects\..\PowerSupply5V.SchDoc		Drawn By:

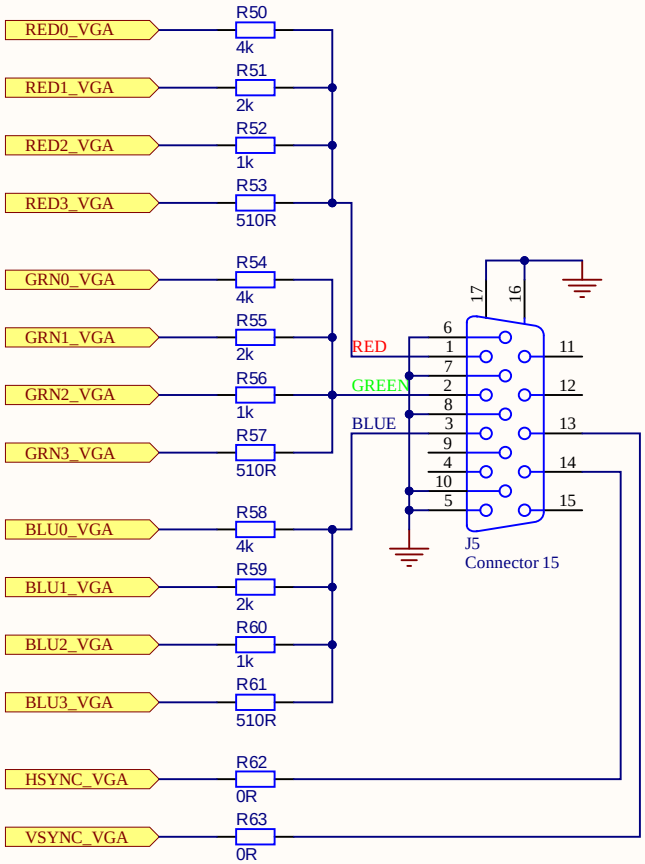

FPC Straight-Thru to allow connection of touch digitiser via ribbon cable for different screens

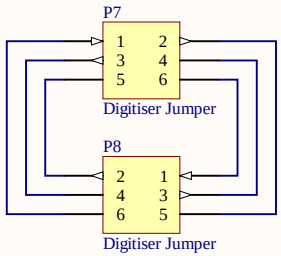

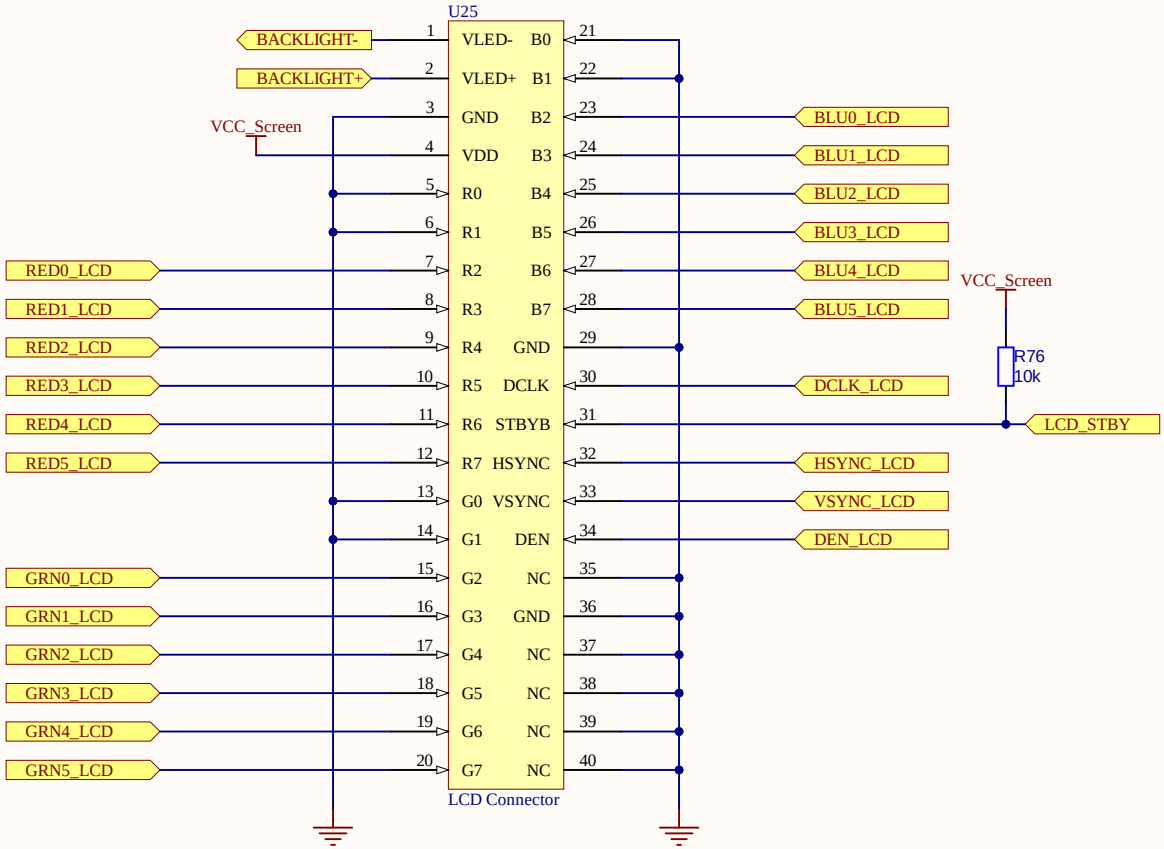

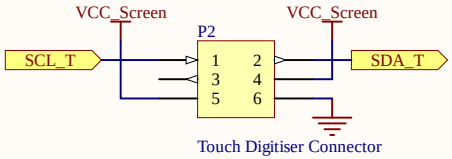

Title	External VGA & LCD VGA		
Size: A4	Number: *	Drawn By: *	
Date: 12.12.2020.	Revision: *	Sheet * of *	* 4 17
File: D:\projects\lrnas\PCB_designs\Altium\megaphone-r2-nohistory\VGA.SchDoc			Lachlan McDonald

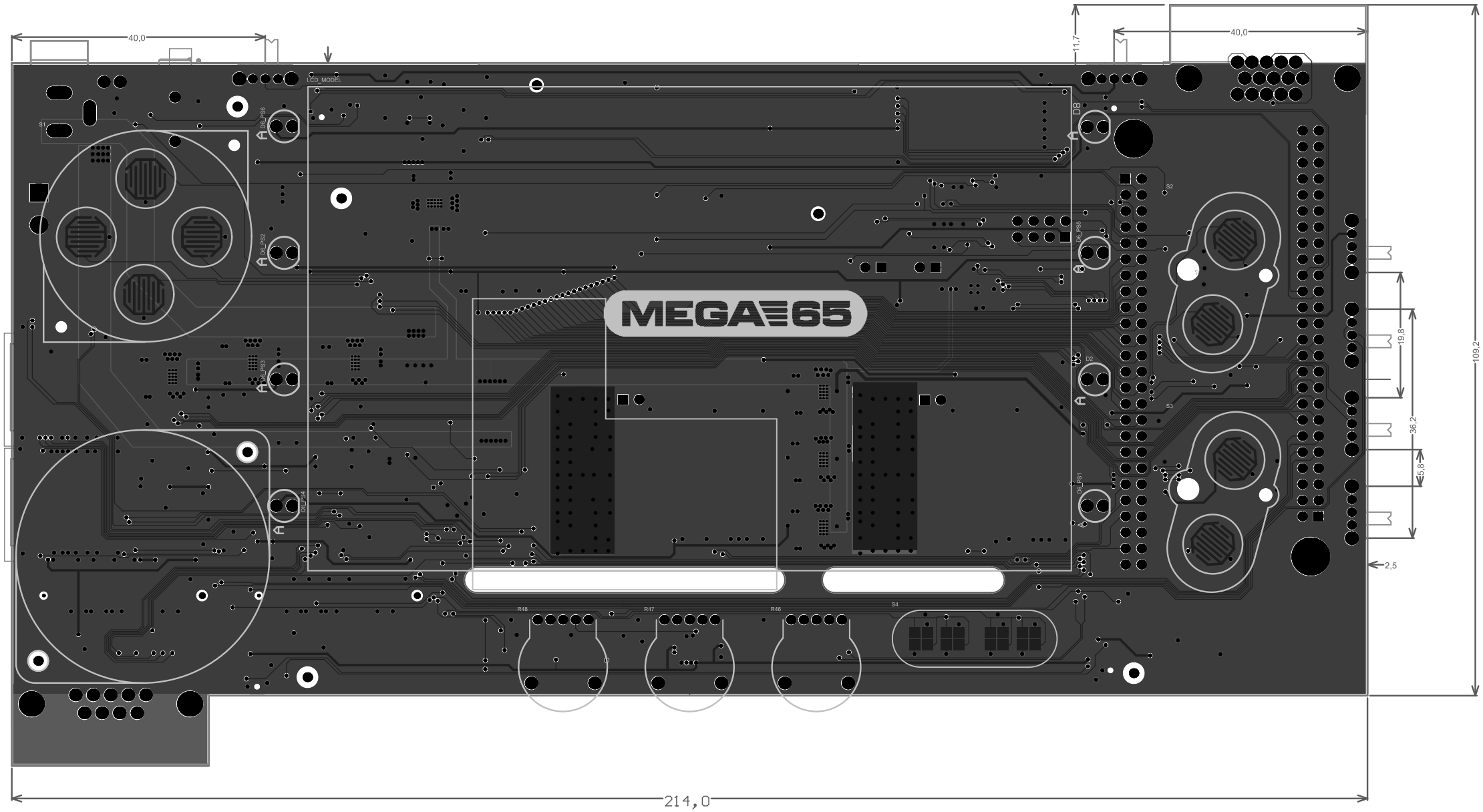
40,0
11,7
40,0
LCD_MODEL
S1
D6_PS6
D5_PS5
D4_PS4
D3_PS3
D8
D7_PS7
D2
D1_PS1
S2
S3
S4
R48
R47
R46
MEGA65
19,8
36,2
5,8
2,5
109,2
214,0

Board Stack Report