ICT Assignment 2

Section 3: CISCO Packet Tracer

Name: Muhammad Farhan
Roll no: 25K-0538
Section: BCS-1K
Course: Information and Communication Technology Lab
Course Instructor: Miss Syeda Tehreem Gilani

Section 3: CISCO Packet Tracer

1. What is a computer network? Explain its purpose in simple words.

Computer network: A computer network is a group of two or more computers connected together (wired or wirelessly) to share information.

Purpose: Its main purpose is to allow devices to communicate and share resources and data (wirelessly), such as files, internet access, and printers, without needing to physically move data between them.

2. Write any three types of networks (based on size or coverage area) and explain each in one or two lines. (Example: LAN, MAN, WAN)

LAN (Local Area Network): This network connects devices within a small, specific area like a single room, home, office, or building. It is high-speed and typically owned privately.

MAN (Metropolitan Area Network): This covers a larger geographic area than a LAN, typically spanning an entire city or a large university campus. It often connects multiple LANs together.

WAN (Wide Area Network): This spans a vast geographic distance, such as a country, continent, or the entire globe. The biggest and most common example of a WAN is the Internet itself.

3. Draw and label any five network topologies. (Examples to draw: Bus, Star, Ring, Mesh, Hybrid).

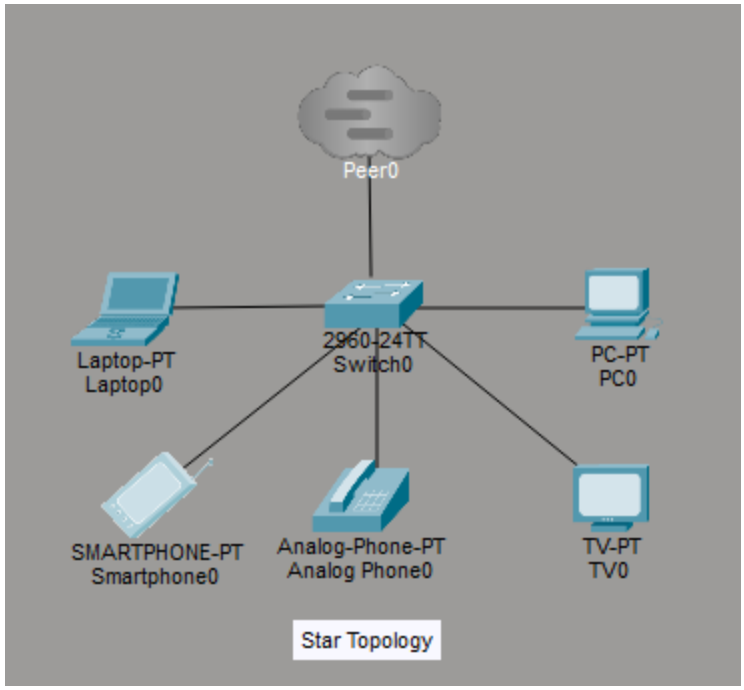

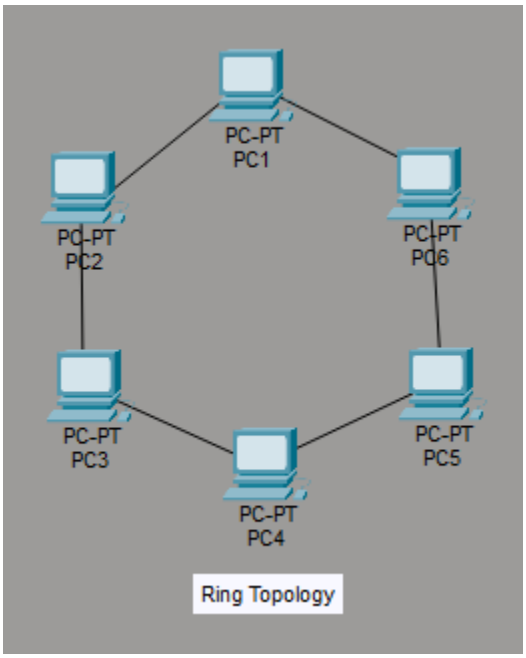

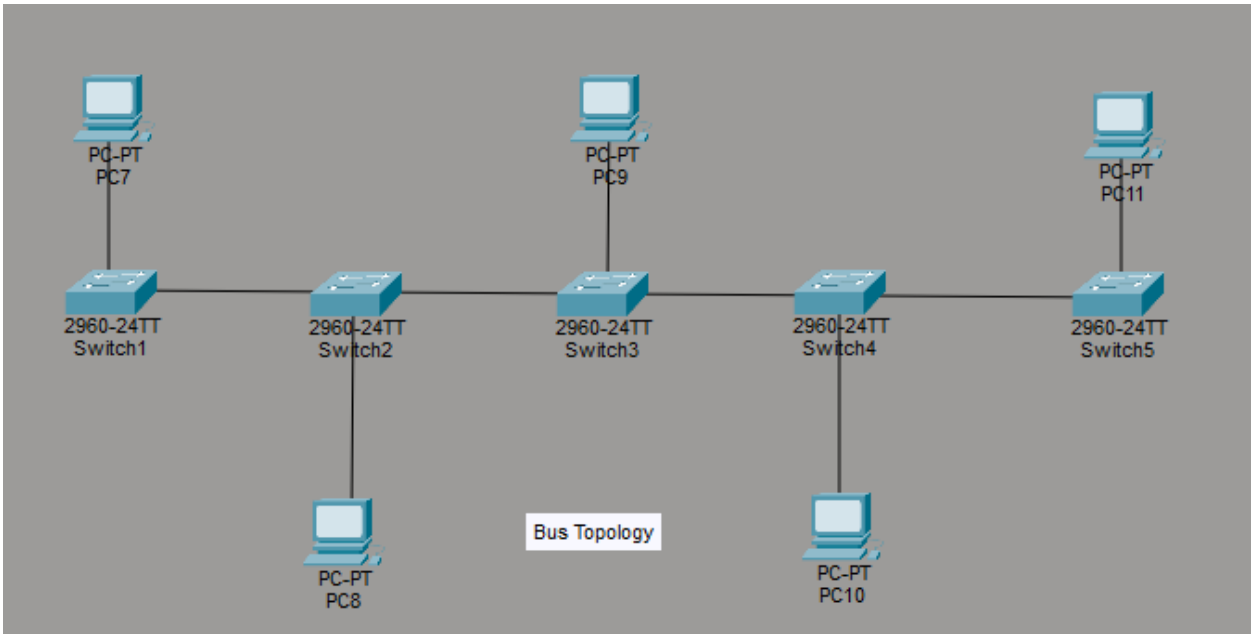
PC-PT
PC7
PC-PT
PC9
PC-PT
PC11
2960-24TT
Switch1
2960-24TT
Switch2
2960-24TT
Switch3
2960-24TT
Switch4
2960-24TT
Switch5
PC-PT
PC8
Bus Topology
PC-PT
PC10

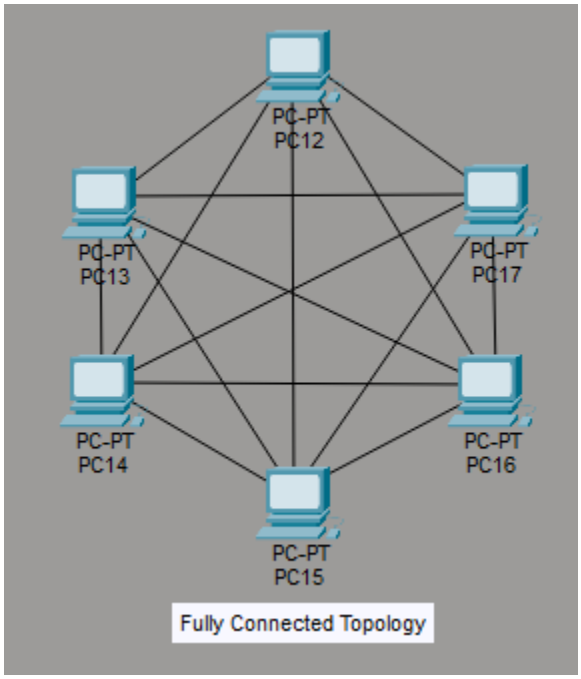
PC-PT
PC12
PC-PT
PC13
PC-PT
PC17
PC-PT
PC14
PC-PT
PC16
PC-PT
PC15
Fully Connected Topology

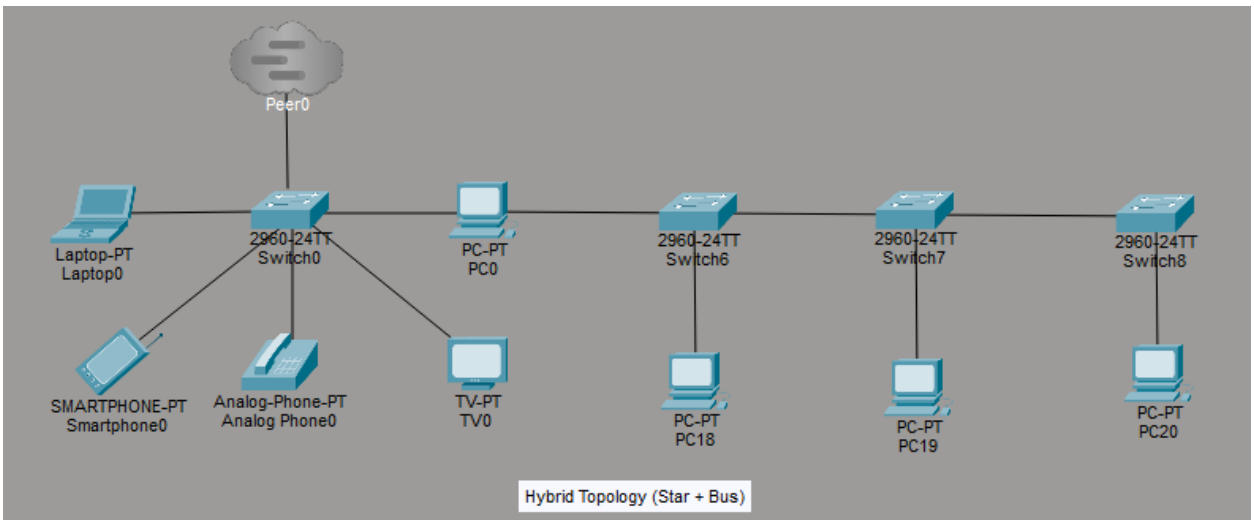
Peer0
Laptop-PT
Laptop0
2960-24TT
Switch0
PC-PT
PC0
2960-24TT
Switch6
2960-24TT
Switch7
2960-24TT
Switch8
SMARTPHONE-PT
Smartphone0
Analog-Phone-PT
Analog Phone0
TV-PT
TV0
PC-PT
PC18
PC-PT
PC19
PC-PT
PC20
Hybrid Topology (Star + Bus)