Name: Muhammad Farhan
Roll no: 25K-0538
Section: BCS-2K
Course: DLD Lab
Course Instructor: Sir Ashir Mahboob
Lab 4

Note: I did not want to install a software on my personal computer, so I made all the circuit graphs on a circuit simulation website: http://logic.ly/demo/

Question 1:

Figure 1:
Actual Expression: A’B’C’ + A’BC + ABC’ + ABC

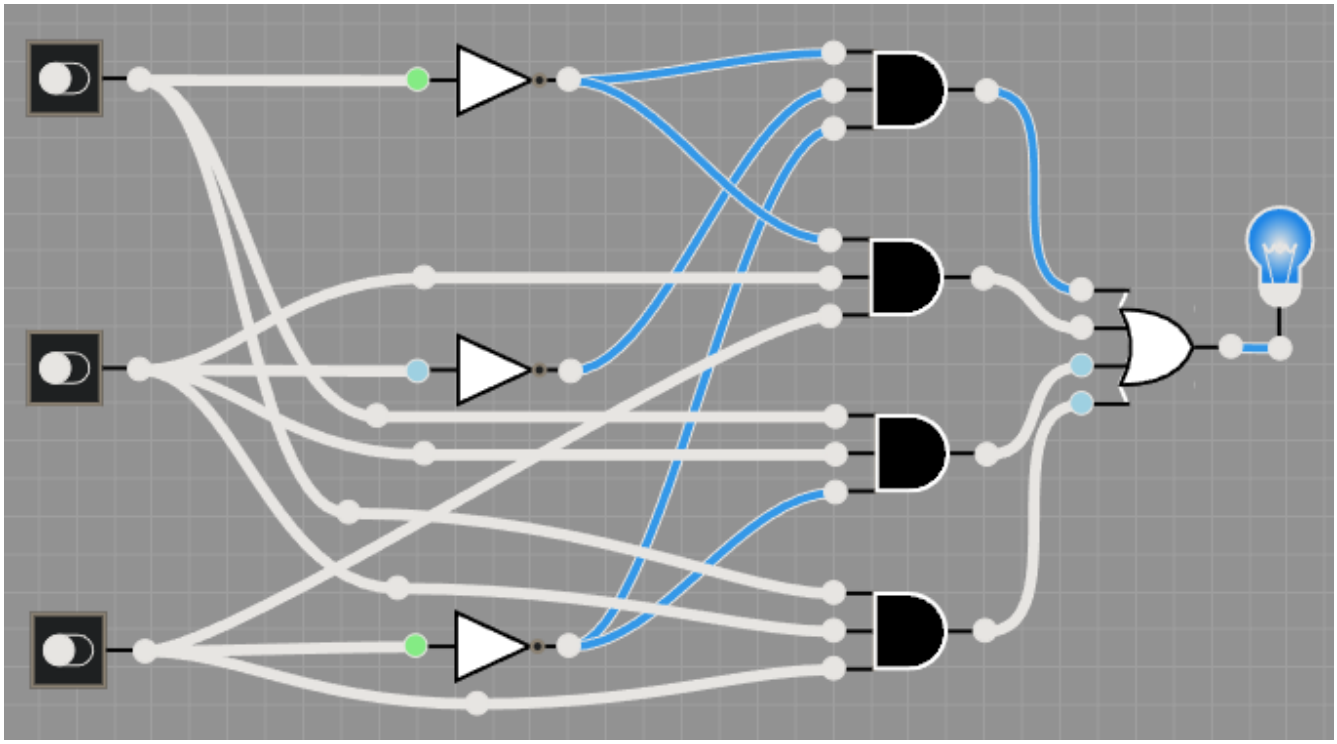

SOP: AB + BC + A’B’C’

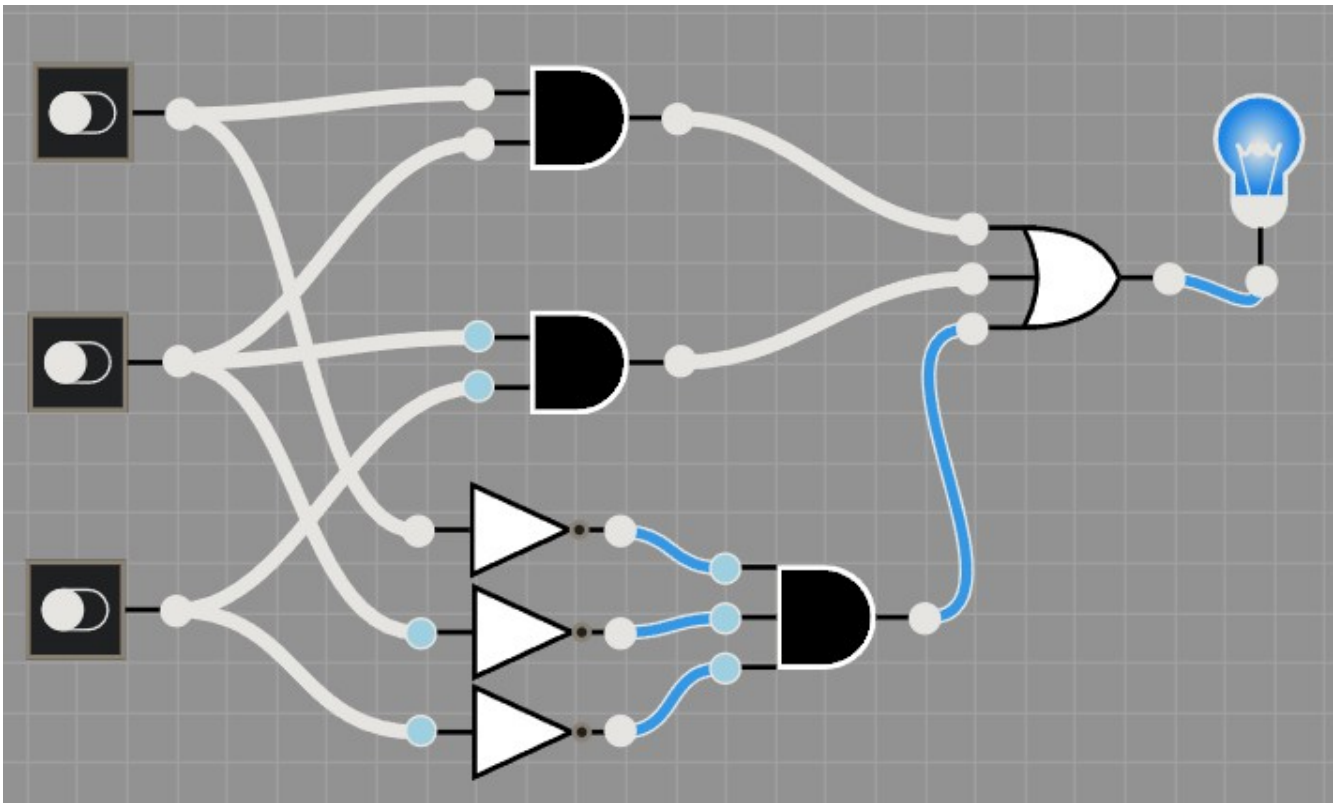

Figure 2:

Actual Expression: A’B’C’ + A’B’C + A’BC’ + ABC + AB’C + AB’C’

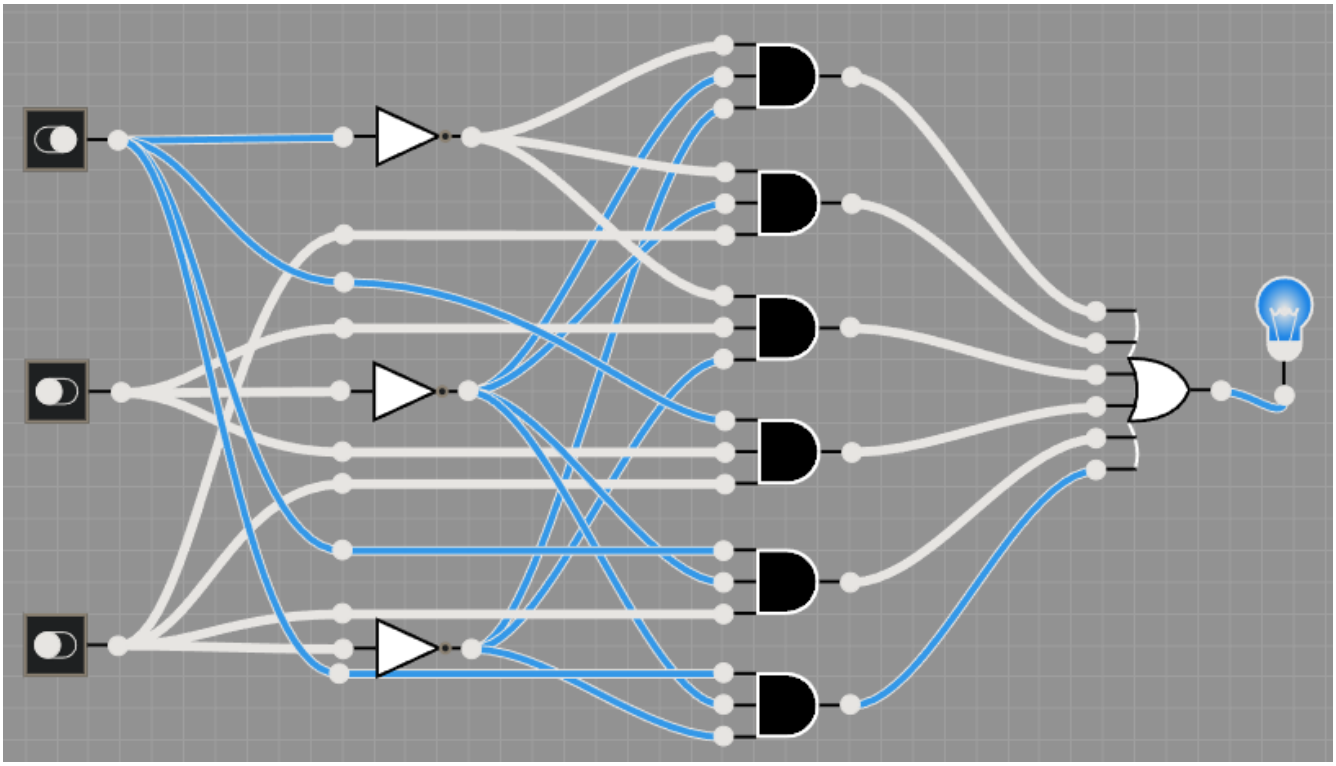

SOP: B’ + A’C’ + AC

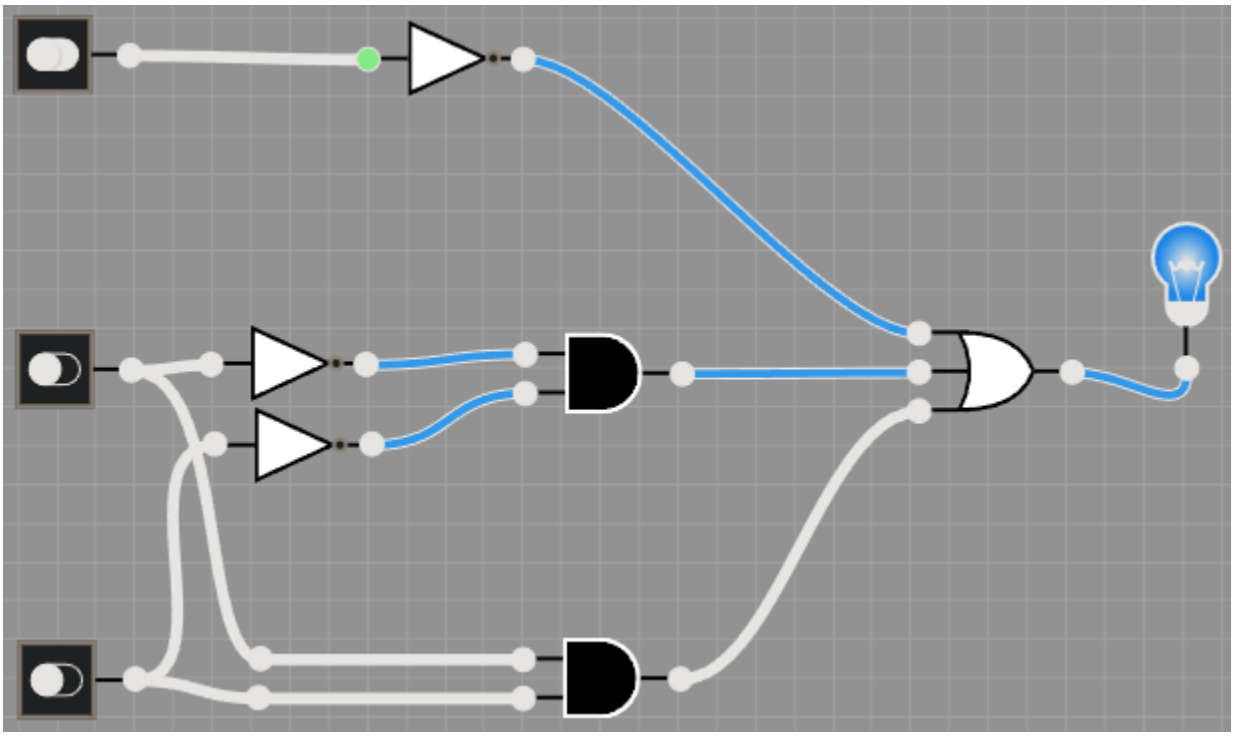

Truth Table

A	B	C	Figure 1	Figure 2
0	0	0	1	1
0	0	1	0	1
0	1	0	0	1
0	1	1	1	0
1	0	0	0	1
1	0	1	0	1
1	1	0	1	0
1	1	1	1	1

Question 2:

Figure 1:

POS: (A+B+D’)(C’+D’+A)(C’+D’+B’)(C+D’+B)

Figure 2:

POS: (A+B+C’)(A’+B’)(A’+B)(C’+D+B)

Question 3:

SOP: X = B’ + CA’

A	B	C	X
0	0	0	1
0	0	1	1
0	1	0	0
0	1	1	1
1	0	0	1
1	0	1	1
1	1	0	0
1	1	1	0

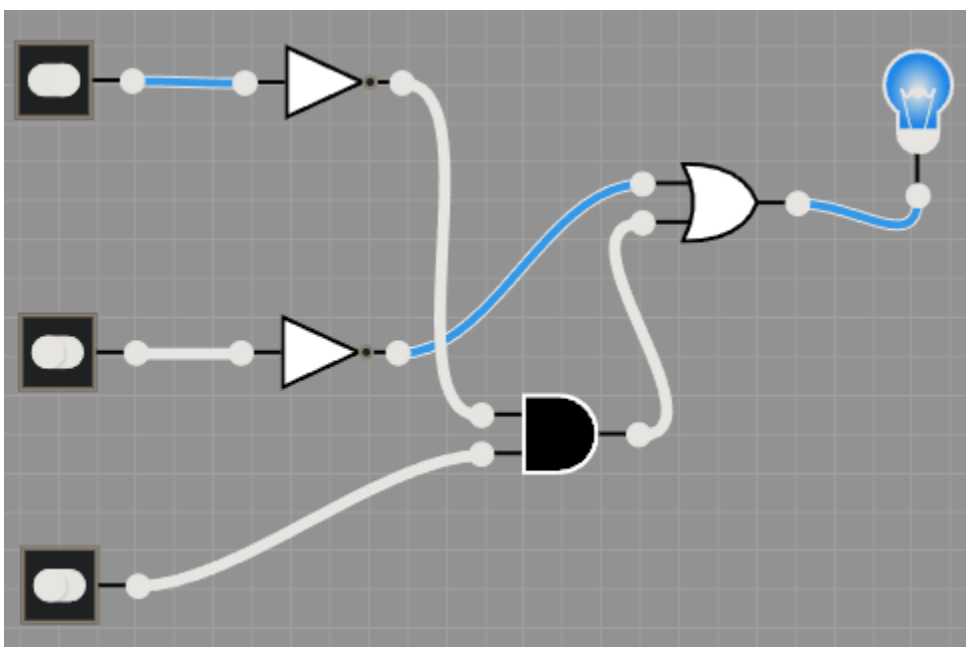

Question 4:

SOP: X = D’ + B’CD

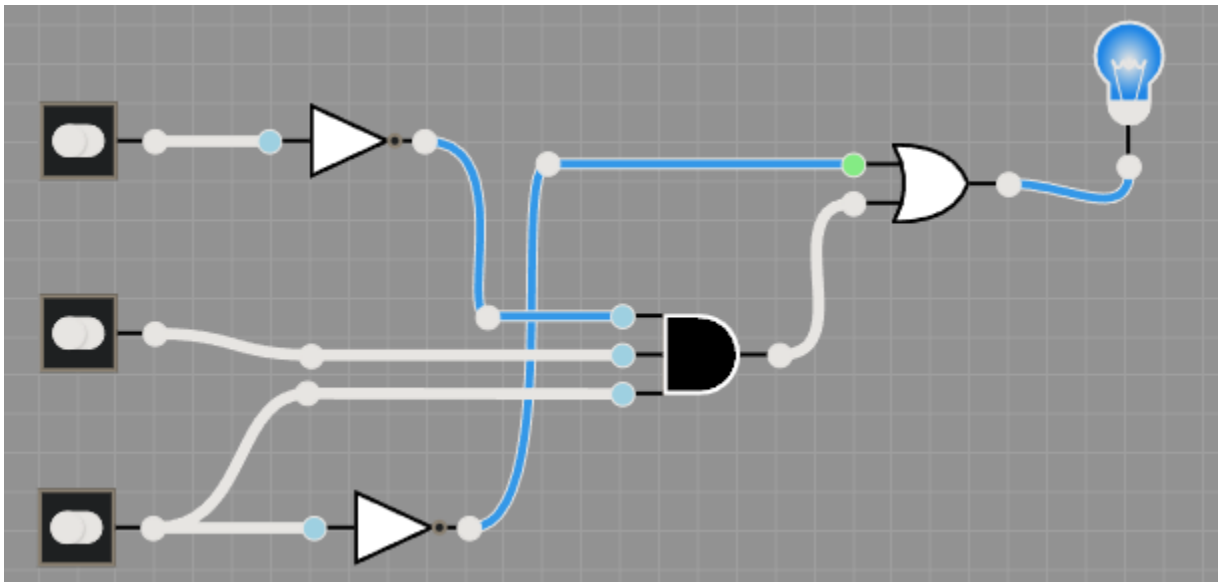

POS: X = (C+D’)(B’+D’)

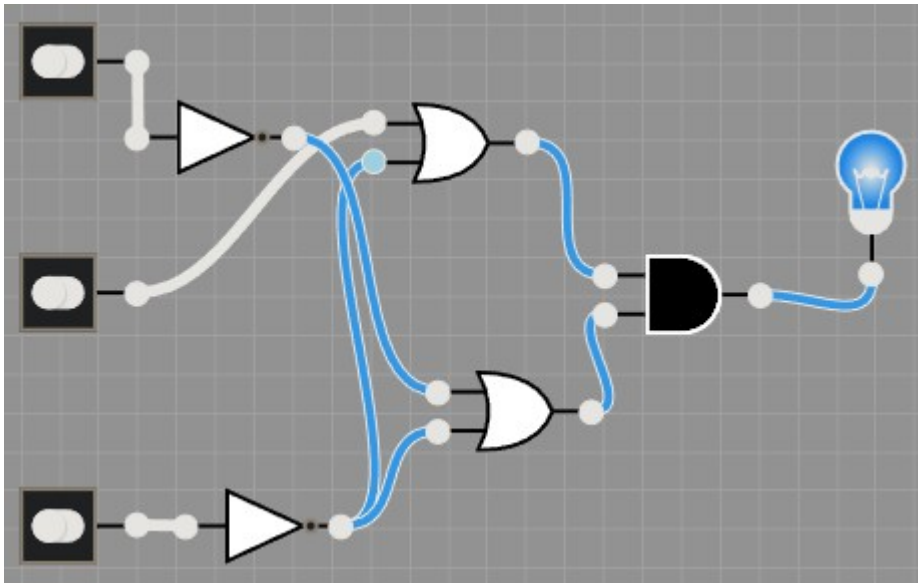
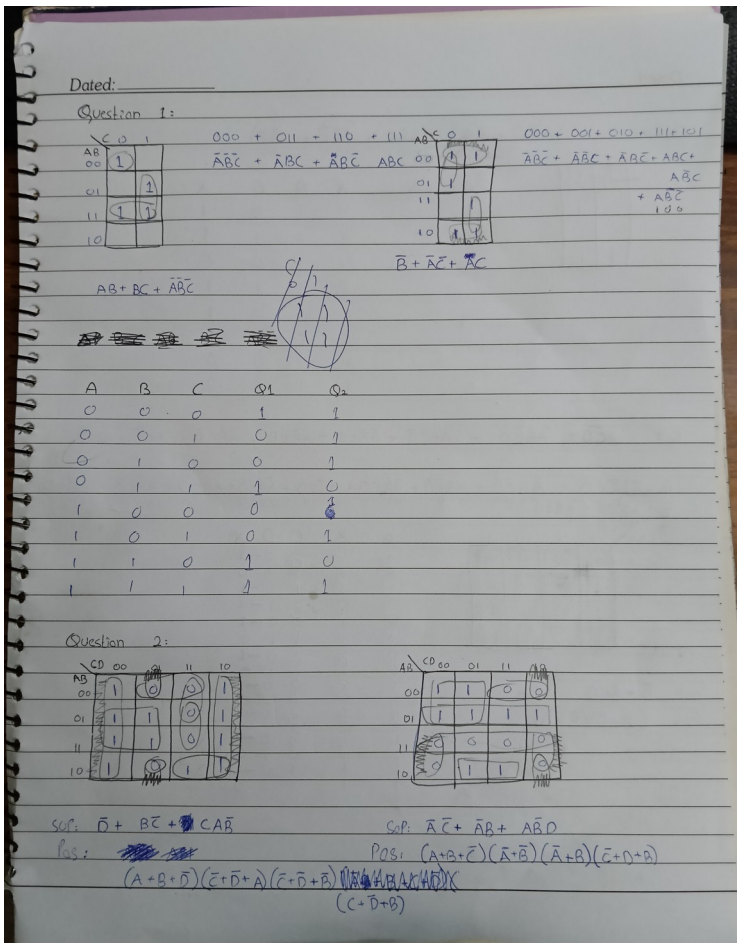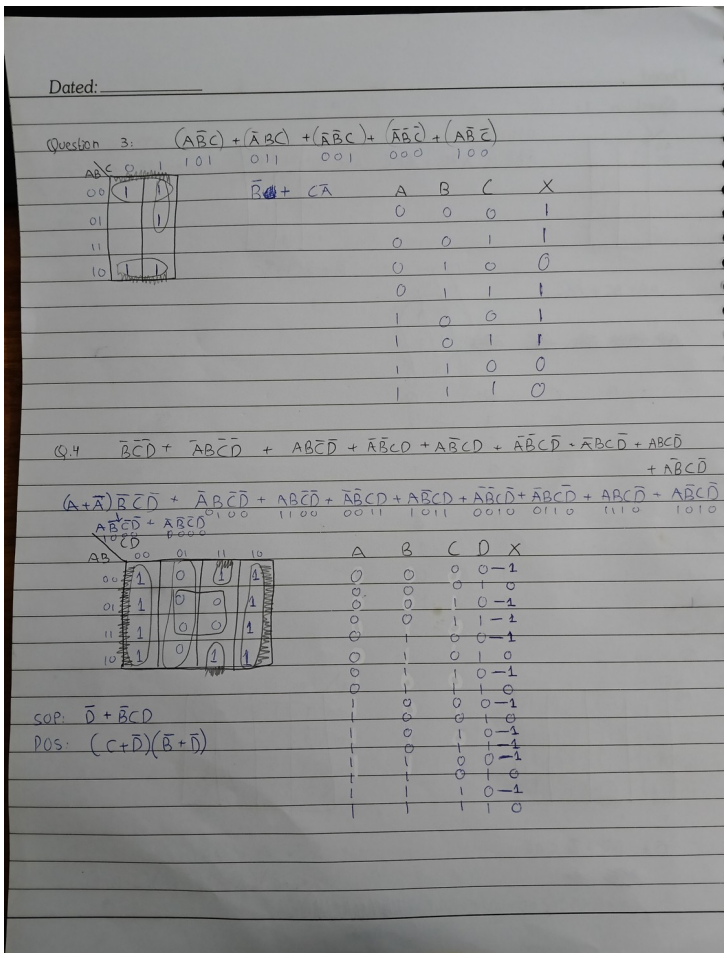
A	B	C	D	X
0	0	0	0	1
0	0	0	1	0
0	0	1	0	1
0	0	1	1	1
0	1	0	0	1
0	1	0	1	0
0	1	1	0	1
0	1	1	1	0
1	0	0	0	1
1	0	0	1	0
1	0	1	0	1
1	0	1	1	1
1	1	0	0	1
1	1	0	1	0
1	1	1	0	1
1	1	1	1	0