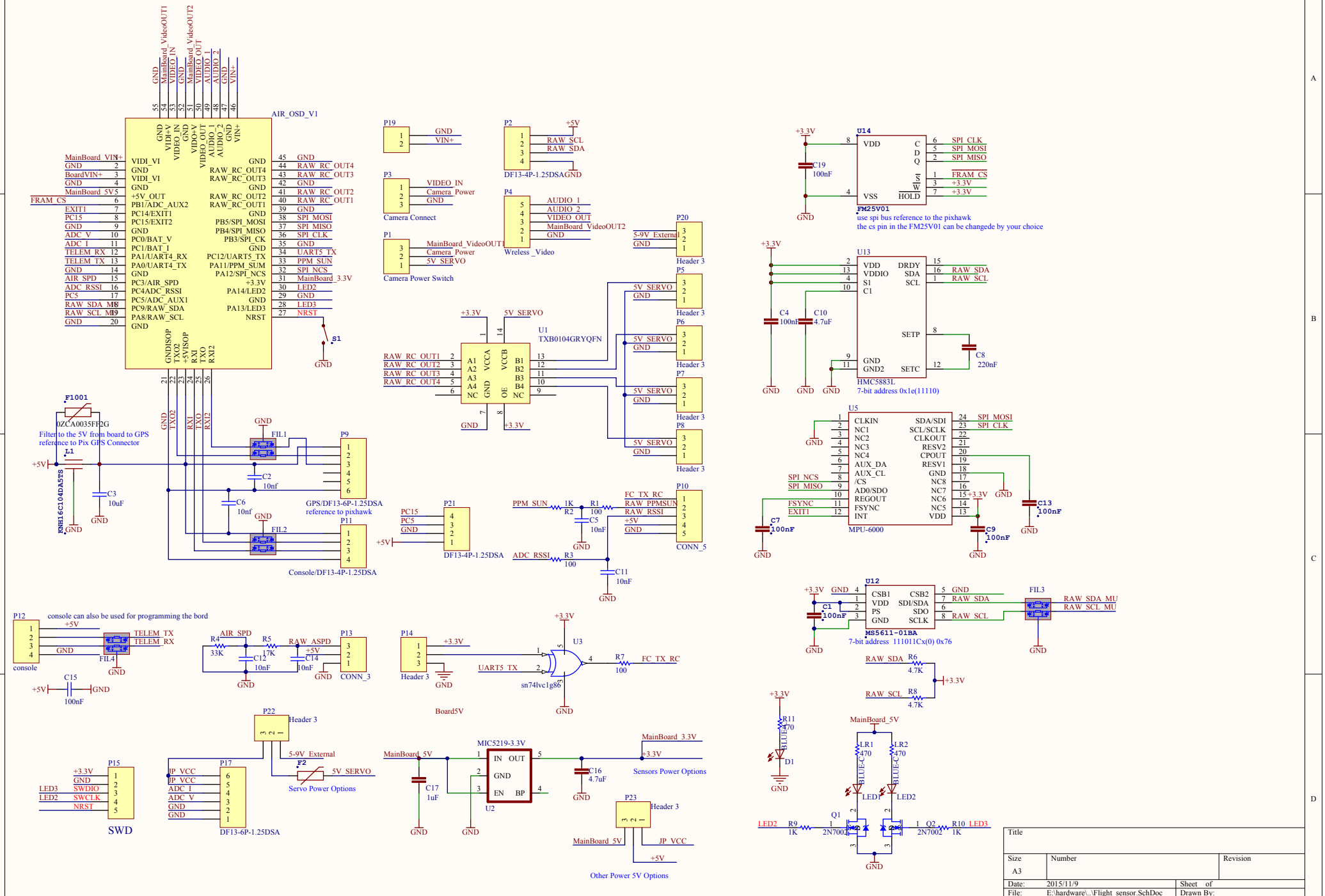

Title		
Size A3	Number	Revision
Date: 2015/11/9		Sheet of
File: E:\hardware\..\Flight_sensor.SchDoc		Drawn By: