AEROSPACE ENGINEERING PORTFOLIO

Muhammad Patel

BEng Aerospace Engineering with Pilot Studies | University of Central Lancashire | Graduated 2025

Project experience in CAD, simulation, aircraft performance, aeromechanics, finite element analysis, surface modelling, automation, and engineering analysis.

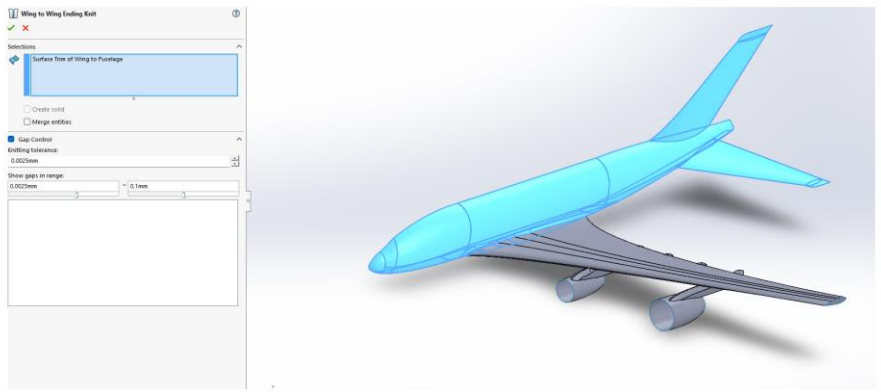

Email: MGaliya16@gmail.com
LinkedIn: linkedin.com/in/muhammad-galiya
Website: https://mgaliya.github.io/MuhammadPortfolio/

Profile and Technical Skills

A concise overview of education, tools, technical interests, and portfolio strengths.

Education

BEng Aerospace Engineering with Pilot Studies, University of Central Lancashire, graduated 2025. Coursework and project work focused on aircraft design, stability, aeromechanics, CAD, simulation, and engineering analysis.

Technical Focus

- Aircraft performance and conceptual sizing
- CAD modelling, surface modelling, and design automation
- FEA, motion analysis, modal analysis, and fatigue analysis
- Data-driven engineering judgement and technical communication

Engineering Tools

- SolidWorks, SolidWorks API, VBA
- Ansys Fluent / simulation workflows
- MATLAB, Excel, Microsoft Office
- 3D printing, wind tunnel testing, metrology and calibration methods

Core Skills Demonstrated

- Payload-range and constraint analysis
- Structural, fatigue, and modal simulation interpretation
- Surface modelling with NURBS and continuity concepts
- Design comparison, validation, and optimisation

Featured Projects

Five selected projects showing aerospace design, simulation, CAD, automation, and analysis capability.

Aircraft Design and Stability Mission Analysis

Aircraft sizing, payload-range analysis, constraint analysis, stability reference values, and cabin layout adjustment for a civil transport mission.

Turbine Blade Aeromechanics Analysis

FEA, mesh verification, material comparison, modal analysis, fatigue analysis, and geometry optimisation of a turbine blade model.

Clutch Design and Motion Analysis

Mechanical CAD design, assembly configurations, 2D drawings, FEA, motion analysis, and realistic engine reference values for clutch engagement.

SolidWorks API Gear Generator

VBA and SolidWorks API automation for parametric spur gear generation with validation logic and Excel preset workflows.

A380 Surface Modelling

Advanced SolidWorks surface modelling using lofted, boundary, filled, trimmed, knit, and split-line surface tools for aircraft geometry.

Aircraft Design and Stability Mission Analysis

Conceptual aircraft sizing and stability study for a civil transport mission.

Payload-range | Constraint analysis | Stability | Excel

Key Work

Analysed a 265-passenger Southampton to Lyon-Bron mission.
Used payload-range analysis to estimate range capability and fuel requirements.
Used take-off, climb, cruise, and landing constraints to select realistic design values.
Calculated MAC, CG, aerodynamic centre, neutral point, and landing gear reference positions.

Corrected Portfolio Values

MTOW scale: about 230,000 kg
Wing loading reference: about 6,200 N/m^2
Engine class: GE CF6-80E1A3 / A330-class turbofan
T/W actual: about 0.28 with two 320 kN engines

Mission												
Distance (km):		780.62		City Origin:	Southampton	City Destination:	Bron			Pax:	265	
Distance (nm):		421.5011		Airport 1:	Southampton Airport (EGHI)	Airport 2:	Lyon-Bron Airport (LFLY)					
Runway length 1 (m):		1887		Altitude 1:	46.3296 m	Runway length 2 (m):	1820			Altitude 2:	200.863	m
Divert airport d1:		Lyon-Saint Exupery Airport (LFLL)			Runway length d1 (m):	4000				Altitude d1	250.241	
Divert airport d2:		Saint-Étienne-Bouthéon Airport (LFMH)			Runway length d2 (m):	2300				Altitude d2	404	
Basic Sizing												
Payload (Kg):	27825		MTOW:	230000 kg	OEW:	120000 kg			Fuel Capacity (Kg):	111000		
Ferry range:	14000 Km		Max Payload Range:	7750 Km								
We/Wo:	0.522		Wf/Wo:	0.36					W/S (N/m2):	6238		
Wing Loading:	6238		Wing area:	361.6					Wingspan:	60.3		
Length:	58.82		AR:	10.06					MAC:	7.38		
Distances measure from vertex of nose cone (m).												
X_{ac_wing}:	39.18747		X_{cg}:	42.50874					$X_{neutral\ point}$:	47.95604		
X_{ac_tail}:	53.21059		$X_{main\ landing\ gear}$:	52.3339					$X_{front\ landing\ gear}$:	3.2081		
Engines												
T/W from constraints:		0.28	Number of engines:		2	Engine model:	General Electric CF6-80E1A3			Thrust:	336000	N
Total Thrust:	672000					T/W actual:	0.29					
TSFC (1/h):	0.52		TSFC (1/s):	0.000144444	TSFC (g/kN/s):	0.01395						
Competitor suitable for this mission				Model:	Boeing 787	Pax	290					
Payload (Kg):	53000		MTOW:	254000 kg	EOW:	129000 kg			Fuel Capacity (Kg):	101522		
	Ferry range	15186				Max Payloa	14100					
We/Wo:	0.507874		Wf/Wo:	0.399695291								
	Wing Load:	675.5968			Wing Surfa	377			Wingspan:	60.12		
Length:	62.81		AR:		9.59							

Aircraft summary table with mission, sizing, stability, and engine reference values.

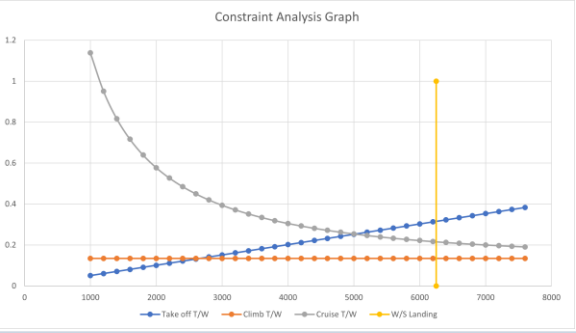

Constraint analysis graph for design point selection.

Turbine Blade Aeromechanics Analysis

Simulation-led study of turbine blade performance, fatigue behaviour, and design optimisation.

Key Results

0.4 m mesh size selected for accuracy/time balance on a large blade model.
K403 superalloy selected for modal and fatigue analysis after material comparison.
Mode 23 produced the highest modal deformation: 0.003082 m at 41.948 Hz.
Hollow blade concept reduced stress by 42.96%; fillets reduced stress by 32.54%.

Skills Demonstrated

FEA setup and boundary condition interpretation
Mesh verification and validation trade-offs
Material comparison using stress, strain, and deformation
Modal analysis, high-cycle fatigue, and geometry optimisation

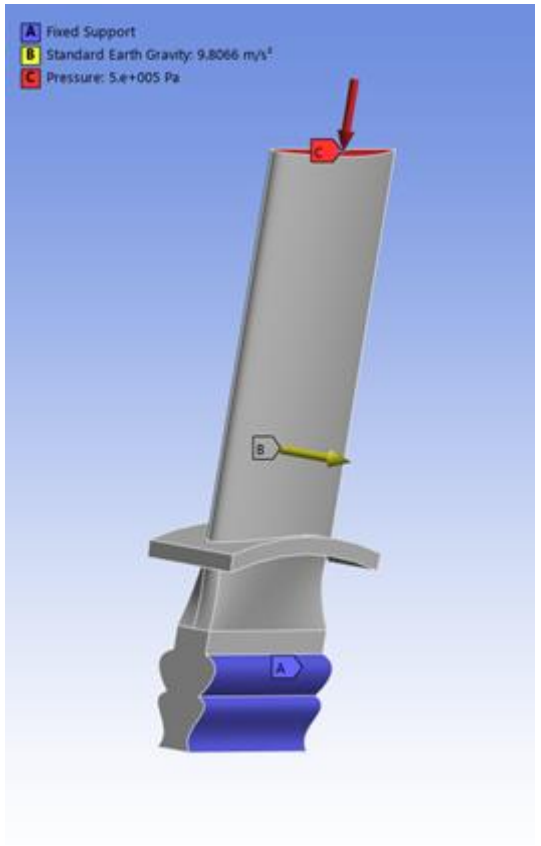

Boundary Condition Set up for initial test

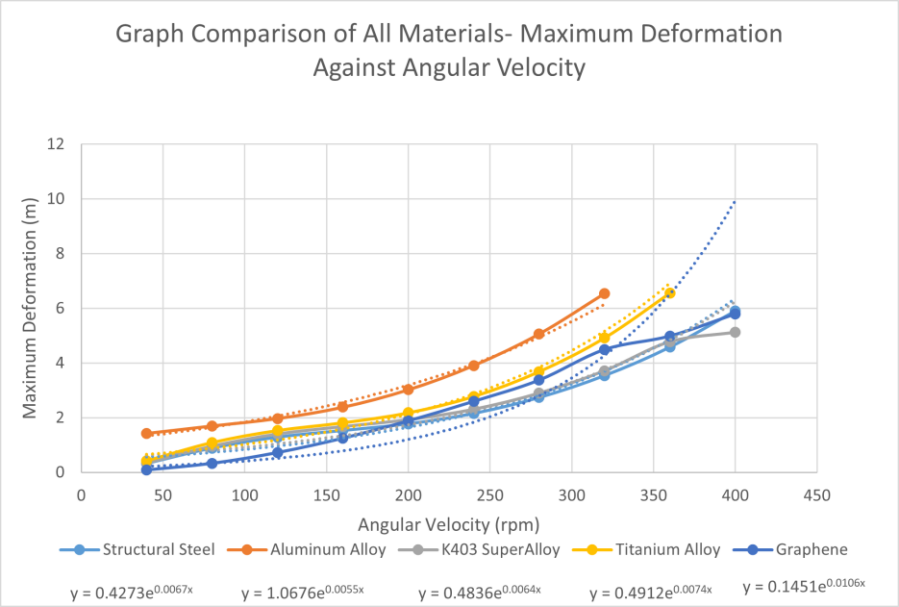

Material comparison across stress, strain, and deformation results.

Clutch Design and Motion Analysis

Mechanical design and simulation workflow for a centrifugal clutch assembly.

Project Scope

Modelled shaft, flywheel, clutch bell, and clutch shoe.
Compared 2, 3, and 4 shoe configurations.
Produced 2D engineering drawings and assembly documentation.
Used realistic Honda GX120 reference values for torque and power context.

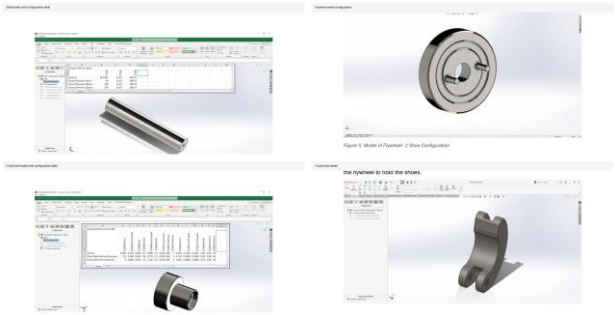

SolidWorks component models for the clutch assembly.

Analysis Work

FEA used to assess strain, displacement, and stress on the clutch shoe.
Motion analysis used to study clutch engagement behaviour.
Simulation showed clutch bell speed rising sharply after engagement.
Design thinking connected CAD, calculations, FEA, and dynamic behaviour.

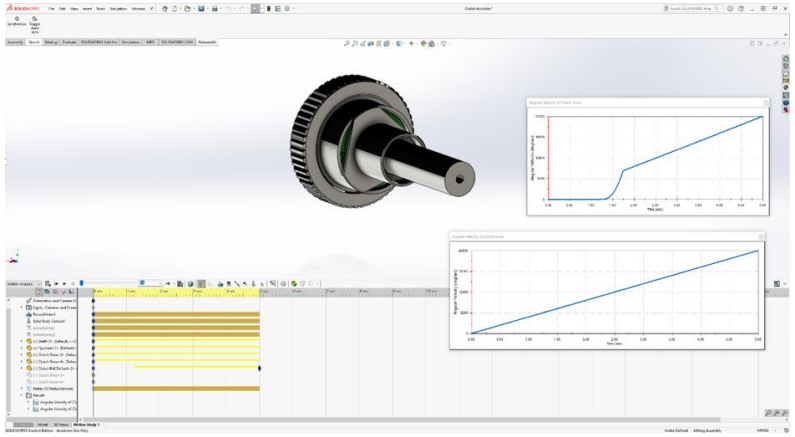

Motion analysis output showing engagement behaviour and angular velocity response.

SolidWorks API Gear Generator

CAD automation using VBA and the SolidWorks API.

Automation Workflow

Macro generates spur gears from custom inputs or Excel presets.
Uses validation rules for tooth count, bore/hub geometry, and dimensional inputs.
Central build logic generates the part through modular SolidWorks API operations.
Reduced repetitive manual modelling time by more than 90%.

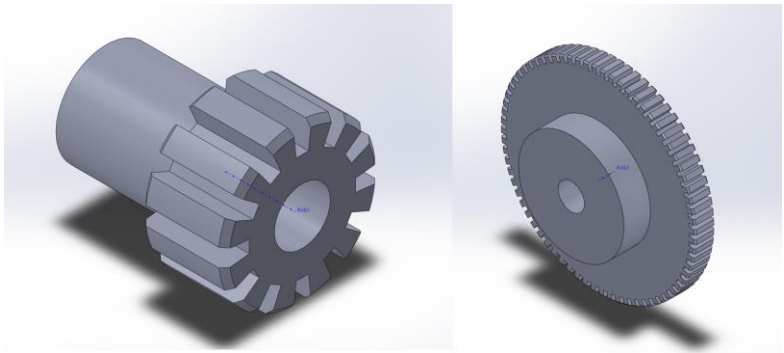

Generated gear examples and test outputs from the automation workflow.

Engineering Value

Parametric CAD workflow using user-defined inputs
Error handling and fail-safe validation before geometry generation
Automated base extrusion, tooth cuts, circular patterning, chamfers, hub, and bore features
Practical link between programming and engineering productivity

```
'--
    inputStr = InputBox("Enter number of teeth (Z):", "Gear Setup", "")
    If inputStr = "" Then Exit Function
    If IsNumeric(inputStr) Then
        If CDbl(inputStr) = Int(CDbl(inputStr)) And CInt(inputStr) >= 0 Then
            Z = CInt(inputStr)
            Exit Do
        End If
    End If
    MsgBox "Invalid input. Enter a whole number greater than 0."
Loop

Do
    inputStr = InputBox("Enter module size in mm:", "Gear Setup", "")
    If inputStr = "" Then Exit Function
    If IsNumeric(inputStr) And Val(inputStr) > 0 Then
        m_mm = Val(inputStr)
        Exit Do
    Else
        MsgBox "Invalid module size. Enter a number greater than 0"
    End If
Loop
moduleSize = m_mm / 1000

Do
    inputStr = InputBox("Enter hub diameter d (mm):", "Gear Setup", "")
    If inputStr = "" Then Exit Function
    If IsNumeric(inputStr) Then
        hubDia = Val(inputStr) / 1000
        Exit Do
    End If
    MsgBox "Invalid hub diameter."
Loop

Do
    inputStr = InputBox("Enter Bore diameter D (mm):", "Gear Setup", "")
    If inputStr = "" Then Exit Function
    If IsNumeric(inputStr) And Val(inputStr) < hubDia * 1000 Then
        boreDia = Val(inputStr) / 1000
        Exit Do
    Else
        MsgBox "Bore diameter must be less than Hub Diameter."
    End If
Loop

Do
    inputStr = InputBox("Enter shoulder height h (mm):", "Gear Setup", "")
    If inputStr = "" Then Exit Function
    If IsNumeric(inputStr) And Val(inputStr) > 0 Then
        hubShoulder = Val(inputStr) / 1000
        Exit Do
    Else
        MsgBox "Invalid hub thickness."
    End If
Loop

Do
    inputStr = InputBox("Enter total hub thickness H (mm):", "Gear Setup", "")
    If inputStr = "" Then Exit Function
    If IsNumeric(inputStr) And Val(inputStr) > hubShoulder * 1000 Then
        hubTotal = Val(inputStr) / 1000
        Exit Do
    Else
        MsgBox "Hub Thickness should be greater than shoulder height."
    End If
```

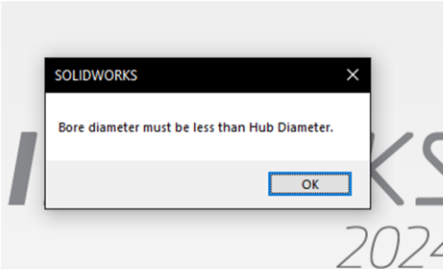

Validation logic and user warning message used to prevent invalid geometry.

A380 Surface Modelling

Advanced CAD project exploring SolidWorks surface modelling workflows for aerospace-style geometry.

Surface Tools Applied

Lofted surface for changing cross-section transitions
Boundary surface for controlled freeform surfaces
Filled surface for patching gaps between edges
Trim and knit surfaces for refinement and integration
Split line for local region control on complex surfaces

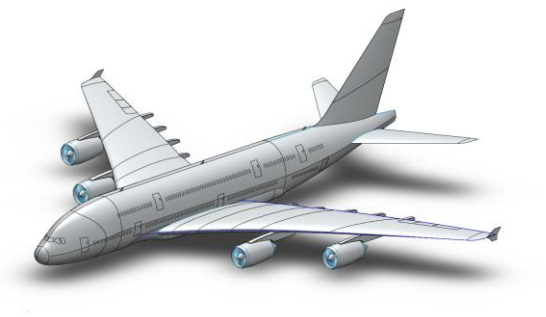

Completed A380 surface model showing the final aircraft form.

Theory and Reflection

NURBS reviewed as the mathematical basis of freeform CAD surfaces.
G0, G1, and G2 continuity used to understand surface smoothness.
Project improved understanding of aircraft-style blended geometry.
Surface quality matters for both visual finish and aerodynamic surfaces.

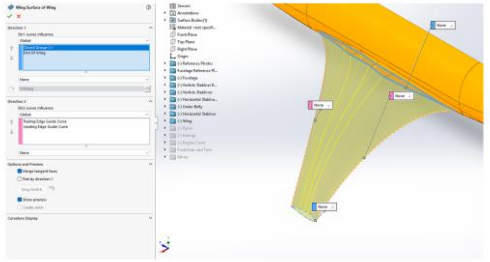

Example boundary surface workflow on aircraft geometry.

Contact

Portfolio website and project pages are available online.

I am interested in aerospace engineering graduate roles, early-career engineering opportunities, aviation-related technical roles, and project collaborations.

Contact Details

Email: MGaliya16@gmail.com
LinkedIn: linkedin.com/in/muhammad-galiya
Website: https://mgaliya.github.io/MuhammadPortfolio/

Scan to view the online portfolio