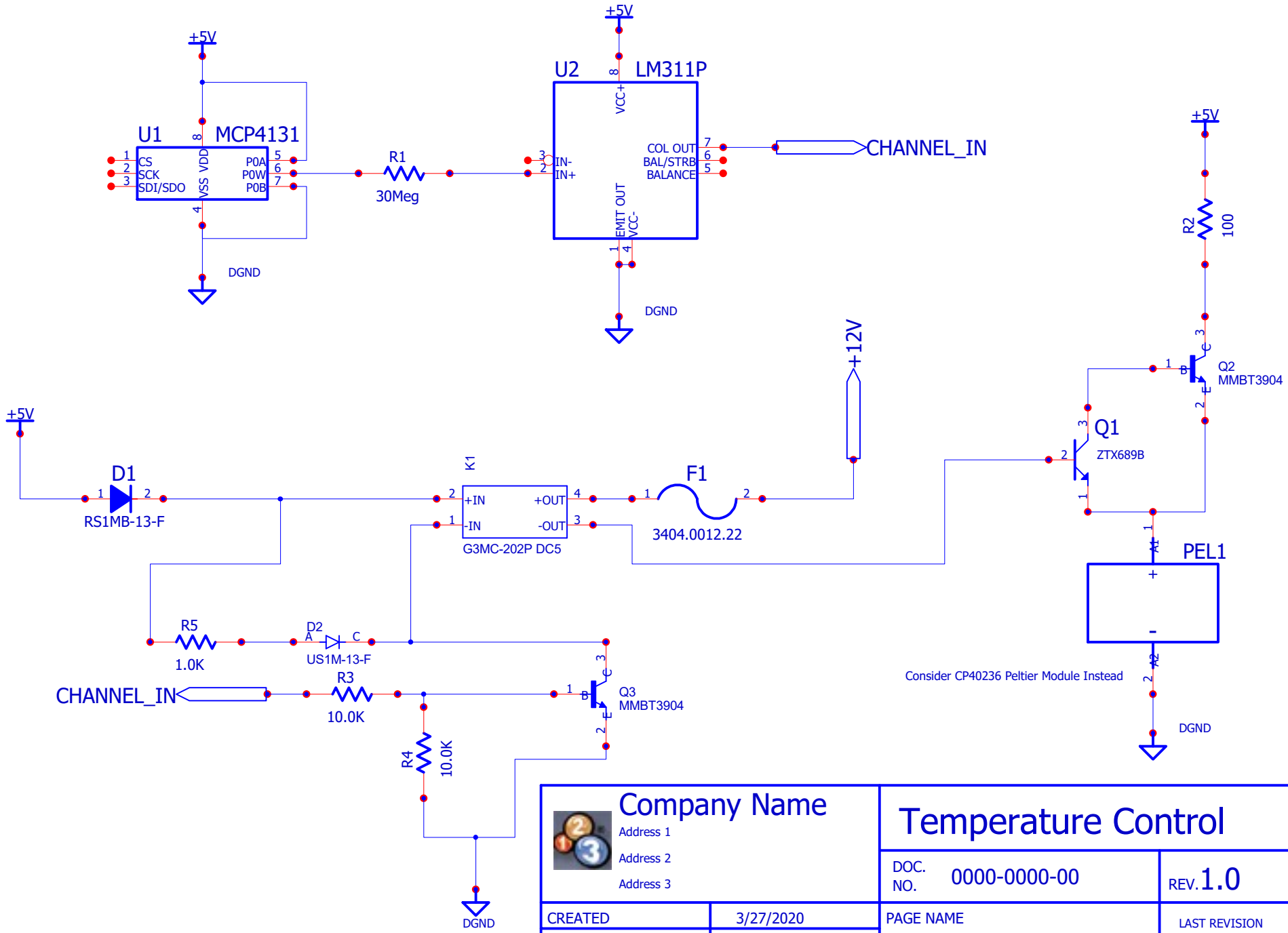

Company Name Address 1 Address 2 Address 3		Temperature Control	
		DOC. NO. 0000-0000-00	REV. 1.0
CREATED	3/27/2020	PAGE NAME	LAST REVISION
AUTHOR	Michael Hernandez	Tempearture Control	_SCHREVDATE
APPROVED BY	_SCHAPPROVEDBY		
CHECKED BY	_SCHCHECKEDBY		PAGE 2 OF 2