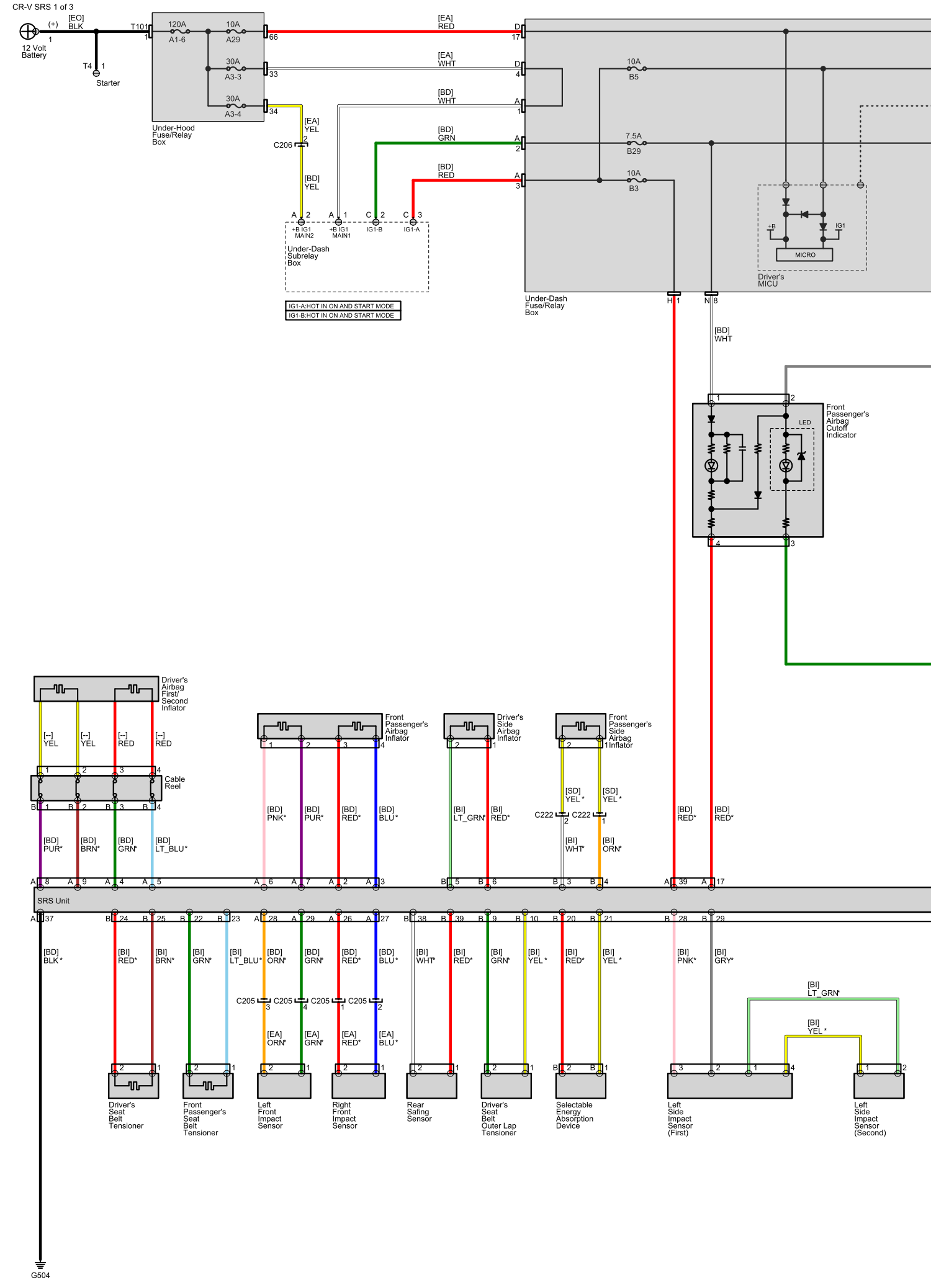
12 Volt Battery
[EO] BLK
T101
T4
Starter
120A A1-6
10A A29
30A A3-3
30A A3-4
Under-Hood Fuse/Relay Box
[EA] RED
[EA] WHT
[BD] WHT
[BD] GRN
[BD] RED
[EA] YEL
[BD] YEL
C206
+B IG1 MAIN2
+B IG1 MAIN1
IG1-B
IG1-A
Under-Dash Subrelay Box
IG1-A:HOT IN ON AND START MODE
IG1-B:HOT IN ON AND START MODE
10A B5
7.5A B29
10A B3
Under-Dash Fuse/Relay Box
MICRO
Driver's MICU
[BD] WHT
Front Passenger's Airbag Cutoff Indicator
LED
Driver's Airbag First/ Second Inflator
Cable Reel
Front Passenger's Airbag Inflator
Driver's Side Airbag Inflator
Front Passenger's Side Airbag Inflator
[SD] YEL *
C222
[BI] WHT*
[BI] ORN*
SRS Unit
G504
C205
Driver's Seat Belt Tensioner
Front Passenger's Seat Belt Tensioner
Left Front Impact Sensor
Right Front Impact Sensor
Rear Safing Sensor
Driver's Seat Belt Outer Lap Tensioner
Selectable Energy Absorption Device
Left Side Impact Sensor (First)
Left Side Impact Sensor (Second)
[BI] LT_GRN*
[BI] YEL *

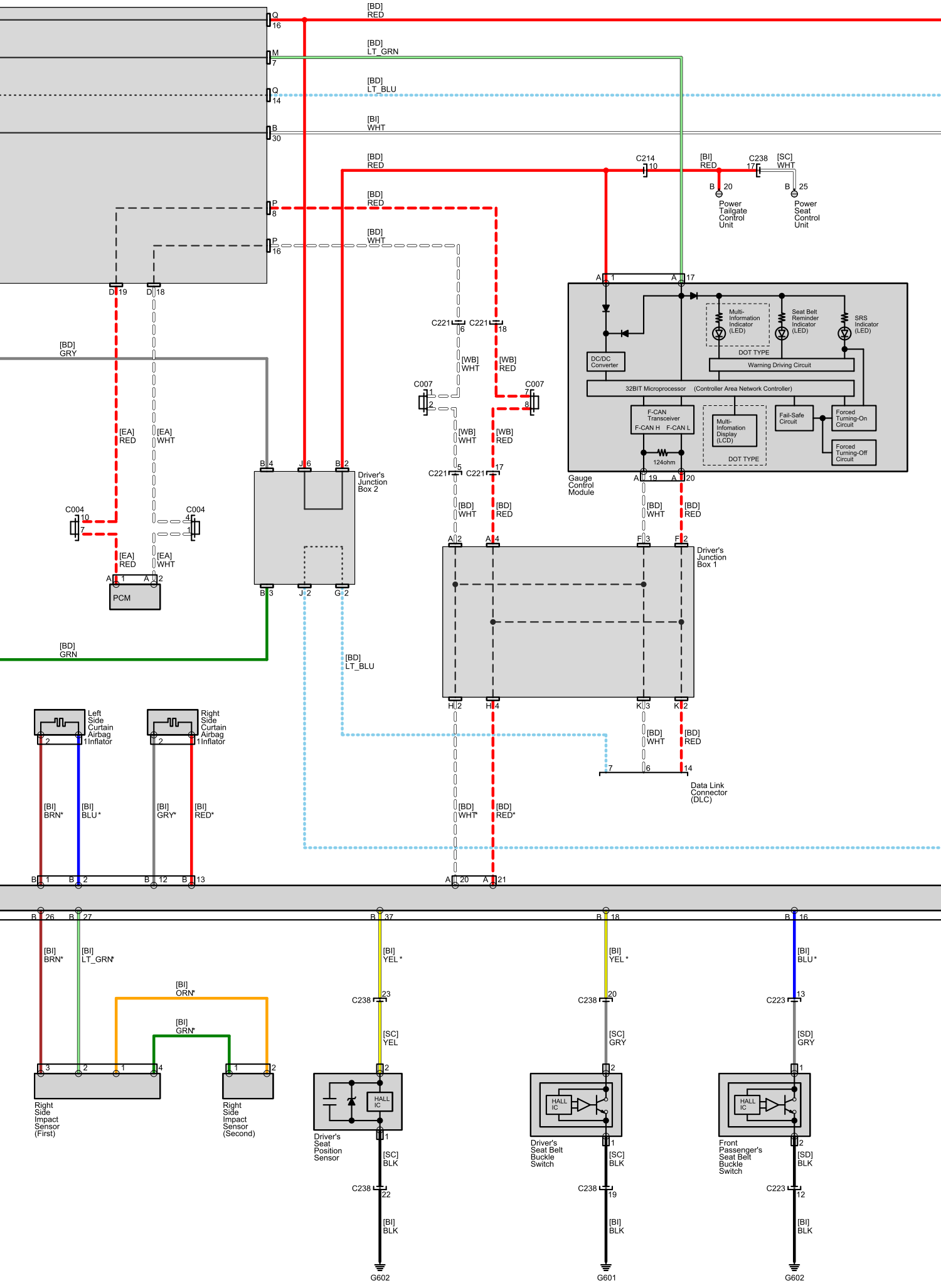
[BD] RED
[BD] LT_GRN
[BD] LT_BLU
[BI] WHT
[BD] RED
[BD] RED
[BD] WHT
C214 10
[BI] RED
C238 17
[SC] WHT
B 20
B 25
Power Tailgate Control Unit
Power Seat Control Unit
Q 16
M 7
Q 14
B 30
P 8
P 16
D 19
D 18
[BD] GRY
[EA] RED
[EA] WHT
C004 10
C004 4
PCM
[BD] GRN
B 4
J 6
B 2
B 3
J 2
G 2
Driver's Junction Box 2
C221 6
C221 18
[WB] WHT
[WB] RED
C007 1
C007 7
C007 2
C007 8
C221 5
C221 17
[BD] WHT
[BD] RED
[BD] LT_BLU
A 1
A 17
Multi-Information Indicator (LED)
Seat Belt Reminder Indicator (LED)
SRS Indicator (LED)
DOT TYPE
DC/DC Converter
Warning Driving Circuit
32BIT Microprocessor (Controller Area Network Controller)
F-CAN Transceiver
F-CAN H F-CAN L
Multi-Infomation Display (LCD)
Fail-Safe Circuit
Forced Turning-On Circuit
Forced Turning-Off Circuit
124ohm
Gauge Control Module
A 19
A 20
A 2
A 4
F 3
F 2
Driver's Junction Box 1
H 2
H 4
K 3
K 2
7
6
14
Data Link Connector (DLC)
Left Side Curtain Airbag Inflator
Right Side Curtain Airbag Inflator
[BI] BRN*
[BI] BLU*
[BI] GRY*
[BI] RED*
[BD] WHT*
[BD] RED*
B 1
B 2
B 12
B 13
A 20
A 21
B 26
B 27
B 37
B 18
B 16
[BI] LT_GRN*
[BI] ORN*
[BI] GRN*
[BI] YEL*
[BI] BLU*
C238 23
C238 20
C223 13
[SC] YEL
[SC] GRY
[SD] GRY
3
2
1
4
Right Side Impact Sensor (First)
Right Side Impact Sensor (Second)
HALL IC
Driver's Seat Position Sensor
Driver's Seat Belt Buckle Switch
Front Passenger's Seat Belt Buckle Switch
[SC] BLK
[SD] BLK
C238 22
C238 19
C223 12
[BI] BLK
G602
G601
G602

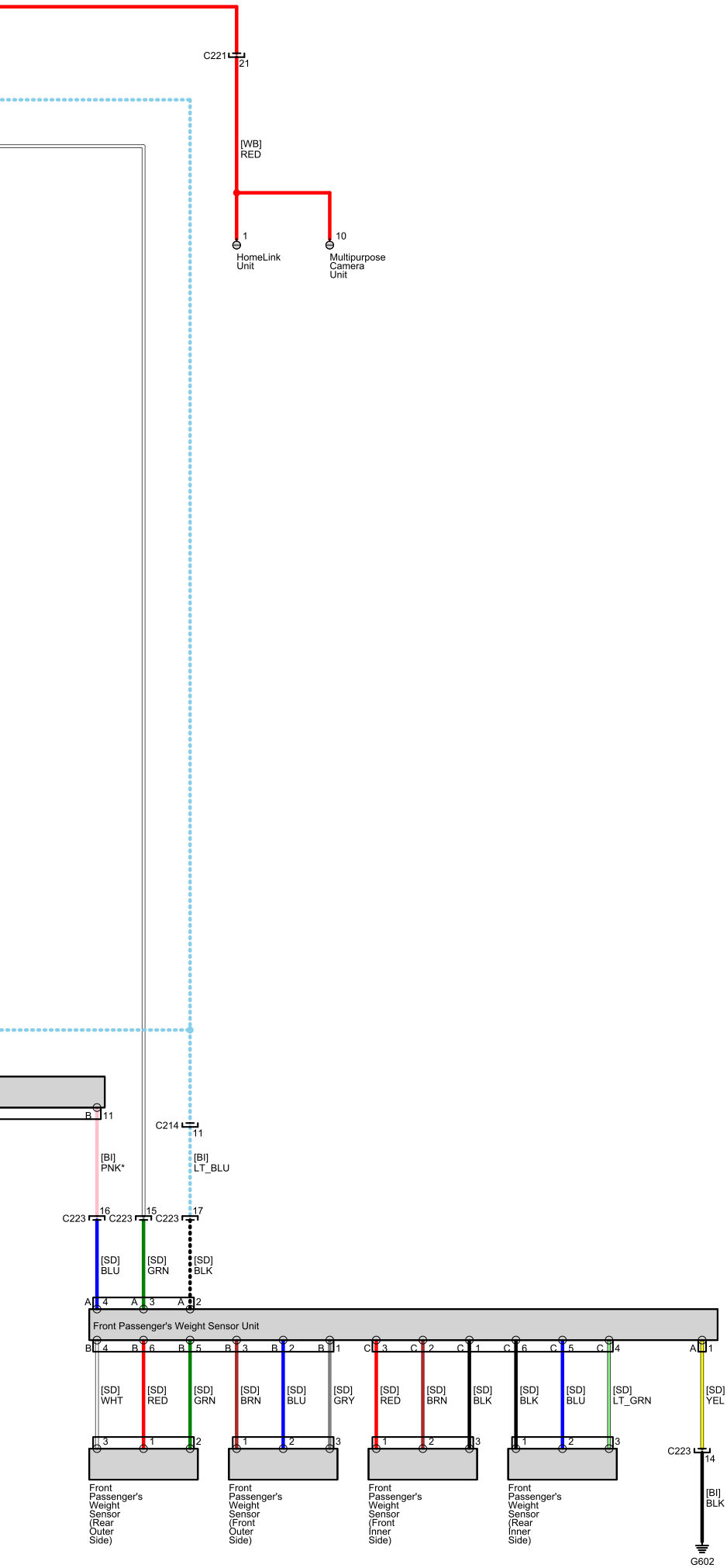
C221
21
[WB]
RED
1
HomeLink
Unit
10
Multipurpose
Camera
Unit
B
11
C214
11
[BI]
PNK*
[BI]
LT_BLU
C223
16
C223
15
C223
17
[SD]
BLU
[SD]
GRN
[SD]
BLK
A
4
A
3
A
2
Front Passenger's Weight Sensor Unit
B
4
B
6
B
5
B
3
B
2
B
1
C
3
C
2
C
1
C
6
C
5
C
4
A
1
[SD]
WHT
[SD]
RED
[SD]
GRN
[SD]
BRN
[SD]
BLU
[SD]
GRY
[SD]
RED
[SD]
BRN
[SD]
BLK
[SD]
BLK
[SD]
BLU
[SD]
LT_GRN
[SD]
YEL
C223
14
[BI]
BLK
G602
Front
Passenger's
Weight
Sensor
(Rear
Outer
Side)
Front
Passenger's
Weight
Sensor
(Front
Outer
Side)
Front
Passenger's
Weight
Sensor
(Front
Inner
Side)
Front
Passenger's
Weight
Sensor
(Rear
Inner
Side)