BLOCK DIAGRAM

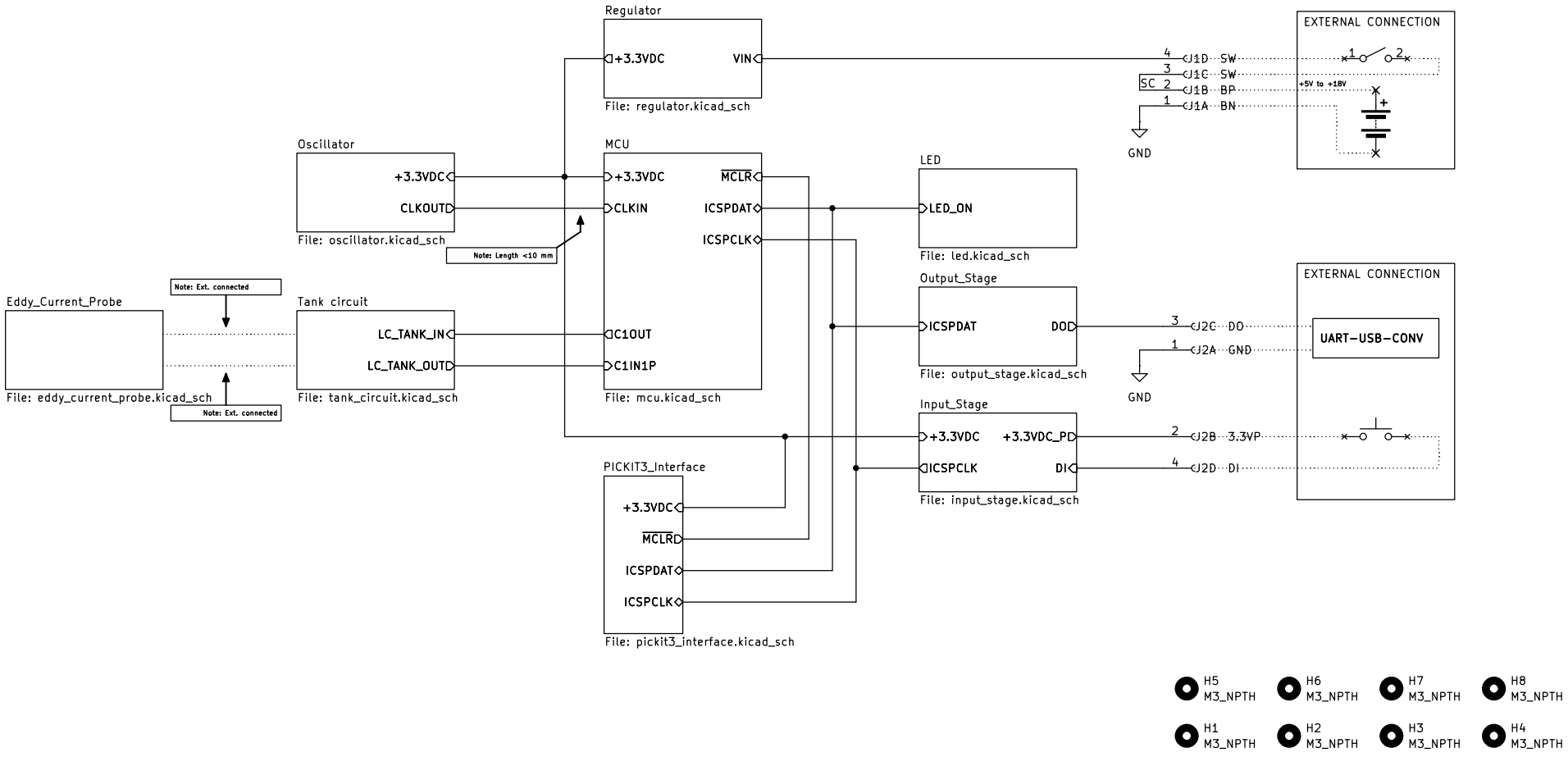

Block	Current consumption [mA]
Regulator	0.15 mA
Oscillator	typ. 1.25 mA
MCU	typ. 1.25 mA / max. 1.5 mA
Tank circuit	typ. 0.47 mA
Input stage	typ. 0.03 mA (ON) / typ. 0 mA (OFF)
Output stage	TBD
LED	typ. 1.4 mA (ON) / typ. 0 mA (OFF)
Total (ON)	**typ. 4.55 mA**
Total (OFF)	**typ. 3.12 mA**

PRJ1
Project name: BPECS

PCB1
Manufacturer: Aisler
Part number: 260122
Hardware revision: A

FW1
Firmware revision:

Sheet: /
File: battery_powered_eddy_current_sensor_rev_A.kicad_sch

Title: BPECS

Size: A4 | Date: 2026-01-22 | **Rev: A**

KiCad E.D.A. 9.0.4 | Id: 1/10

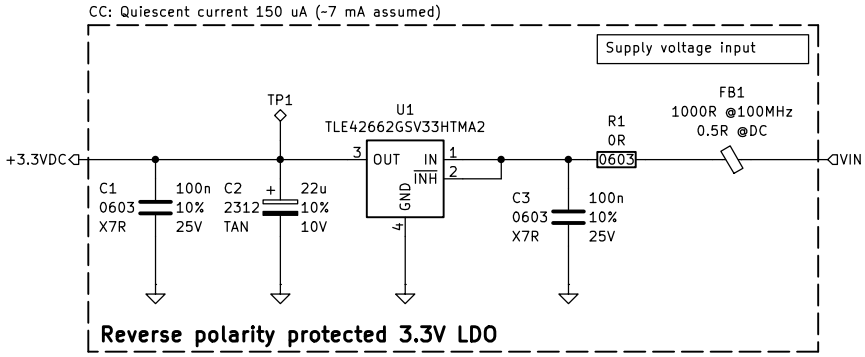

Sheet: /Regulator/
File: regulator.kicad_sch

Title: BPECS

Size: A4	Date: 2026-01-22	**Rev: A**
KiCad E.D.A. 9.0.4		Id: 2/10

CC: 16 MHz oscillator ~5 pF load at 3.3V: typ. 1.25 mA

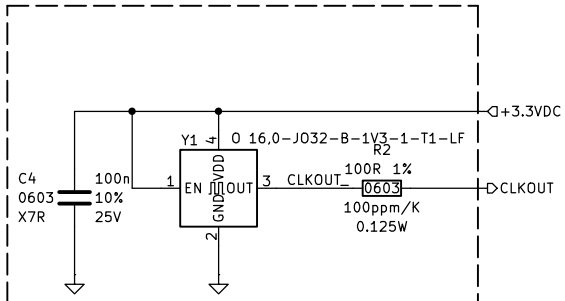

16 MHz Oscillator, +/- 50 ppm

Sheet: /Oscillator/ File: oscillator.kicad_sch		
Title: BPECS		
Size: A4	Date: 2026-01-22	**Rev: A**
KiCad E.D.A. 9.0.4		Id: 3/10

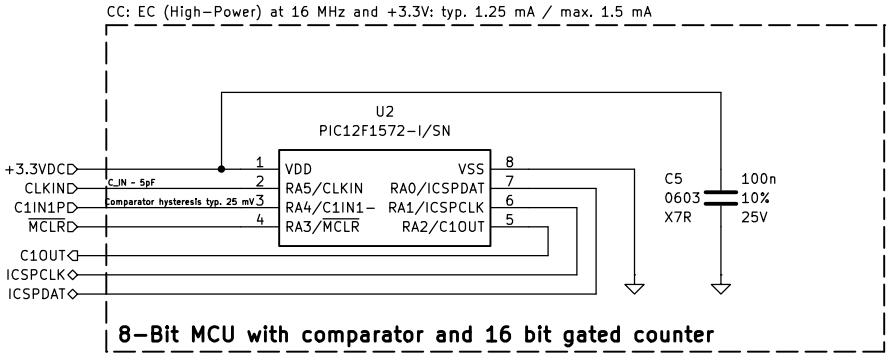

INFORMATION

Operating principle (reciprocal frequency counter)

1) DAC output set to VDD/2 -> connected to CxVP (biasing for oscillator)
2) CxIN1- connected to tank circuit -> connected to CxVN (feedback from LC tank circuit)
3) Comparator output available at pin RA2 (C1OUT) and connected to Timer0 (8-Bit) internally
4) Every (T_MEAS = 2^8/F_IN_LC) Timer0 overflow a gate signal is routed to Timer1
5) 16 MHz reference clock connected to CLKIN and used as F_OSC -> F_INST_C = F_OSC/4
6) Timer1 (16-bit) configured as 16-bit counter in the following mode: TIMER1 GATE SINGLE-PULSE AND TOGGLE COMBINED MODE
7) Timer1 started via setting T1GGO in SW and waiting for the flag to be cleared by HW

Example:

1) LC oscillator frequency is typically between 50 to 200 kHz dependent on the used sensing coil
2) T_MEAS = 5.12 ms (at 50 kHz) to 1.28 ms (200 kHz)
   - 2.1) Maximum allowed measurement time for Timer1 reference clock of 16 MHz: 4.096 ms
   - 2.2) Maximum allowed measurement time for Timer1 reference clock of 8 MHz: 8.192 ms
   - 2.3) Maximum allowed measurement time for Timer1 reference clock of 4 MHz: 16.384 ms
   - 2.4) Maximum allowed measurement time for Timer1 reference clock of 2 MHz: 32.768 ms

Sheet: /MCU/ File: mcu.kicad_sch		
Title: BPECS		
Size: A4	Date: 2026-01-22	**Rev: A**
KiCad E.D.A. 9.0.4		Id: 4/10

CC: Current consumption of tank circuit with PCB coil (at 99 kHz) and 1.6 Vpp is 0.47 mA

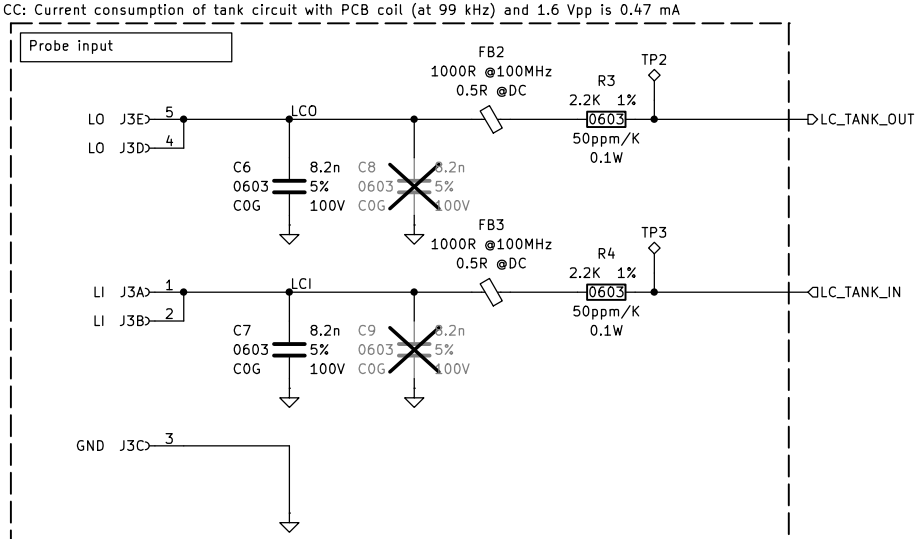

C||C [nF]	Resonance freq. [Hz]	Calculated L [uH]
8.2	50000	1240
8.2	200000	77
4.1	50000	2470
4.1	200000	155

LC tank circuit with probe input

Sheet: /Tank circuit/
File: tank_circuit.kicad_sch

Title: BPECS

Size: A4	Date: 2026-01-22	**Rev: A**
KiCad E.D.A. 9.0.4		Id: 5/10

R = 29 Ohm / L = 620 uH / fres ~ 99 kHz (C6 = C7 = 8.2 nF)

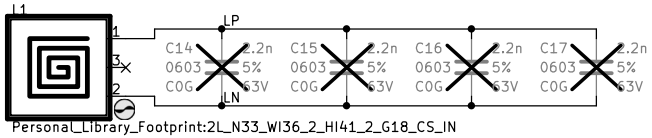

Personal_Library_Footprint:2L_N33_W136_2_H41_2_G18_CS_IN
Part number: 2L_N33_W136_2_H41_2_G18_CS_IN
Revision: 20260121

Eddy current sensing coil

Sheet: /Eddy_Current_Probe/
File: eddy_current_probe.kicad_sch

Title: BPECS

Size: A4	Date: 2026-01-22	**Rev: A**
KiCad E.D.A. 9.0.4		Id: 6/10

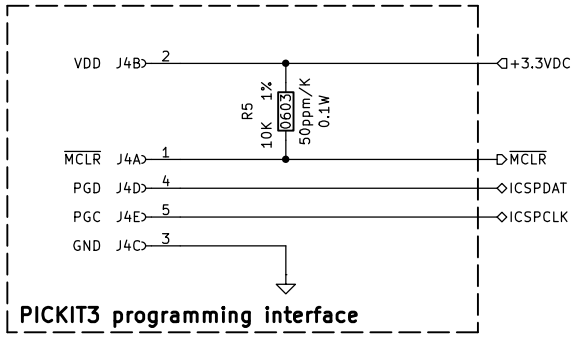

Sheet: /PICKIT3_Interface/
File: pickit3_interface.kicad_sch

Title: BPECS

Size: A4	Date: 2026-01-22	**Rev: A**
KiCad E.D.A. 9.0.4		Id: 7/10

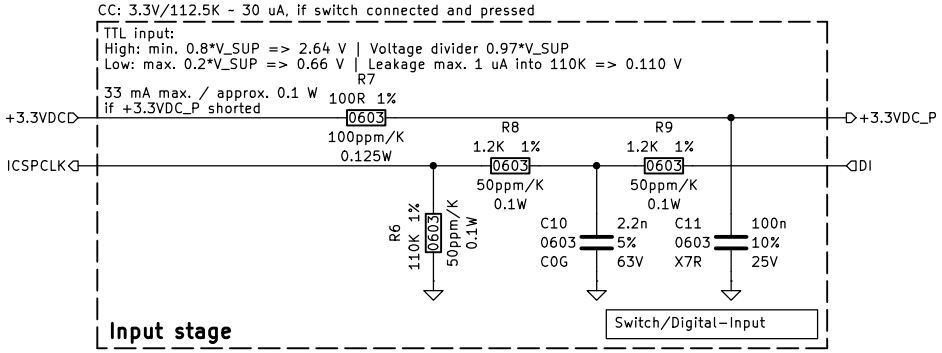

Sheet: /Input_Stage/
File: input_stage.kicad_sch

Title: BPECS

Size: A4	Date: 2026-01-22	**Rev: A**
KiCad E.D.A. 9.0.4		Id: 8/10

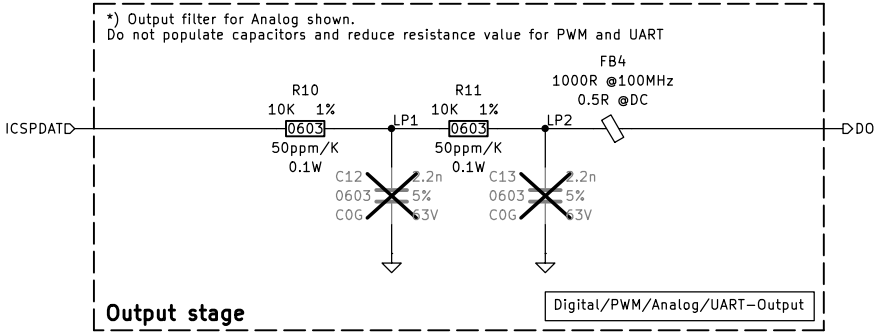

Sheet: /Output_Stage/
File: output_stage.kicad_sch

Title: BPECS

Size: A4	Date: 2026-01-22	**Rev: A**
KiCad E.D.A. 9.0.4		Id: 9/10

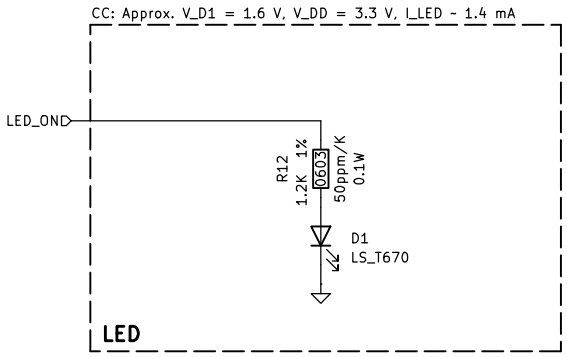

Sheet: /LED/
File: led.kicad_sch

Title: BPECS

Size: A4	Date: 2026-01-22	**Rev: A**
KiCad E.D.A. 9.0.4		Id: 10/10