WovenGold
Pamper Your Senses

Bliss

Technical Diagram
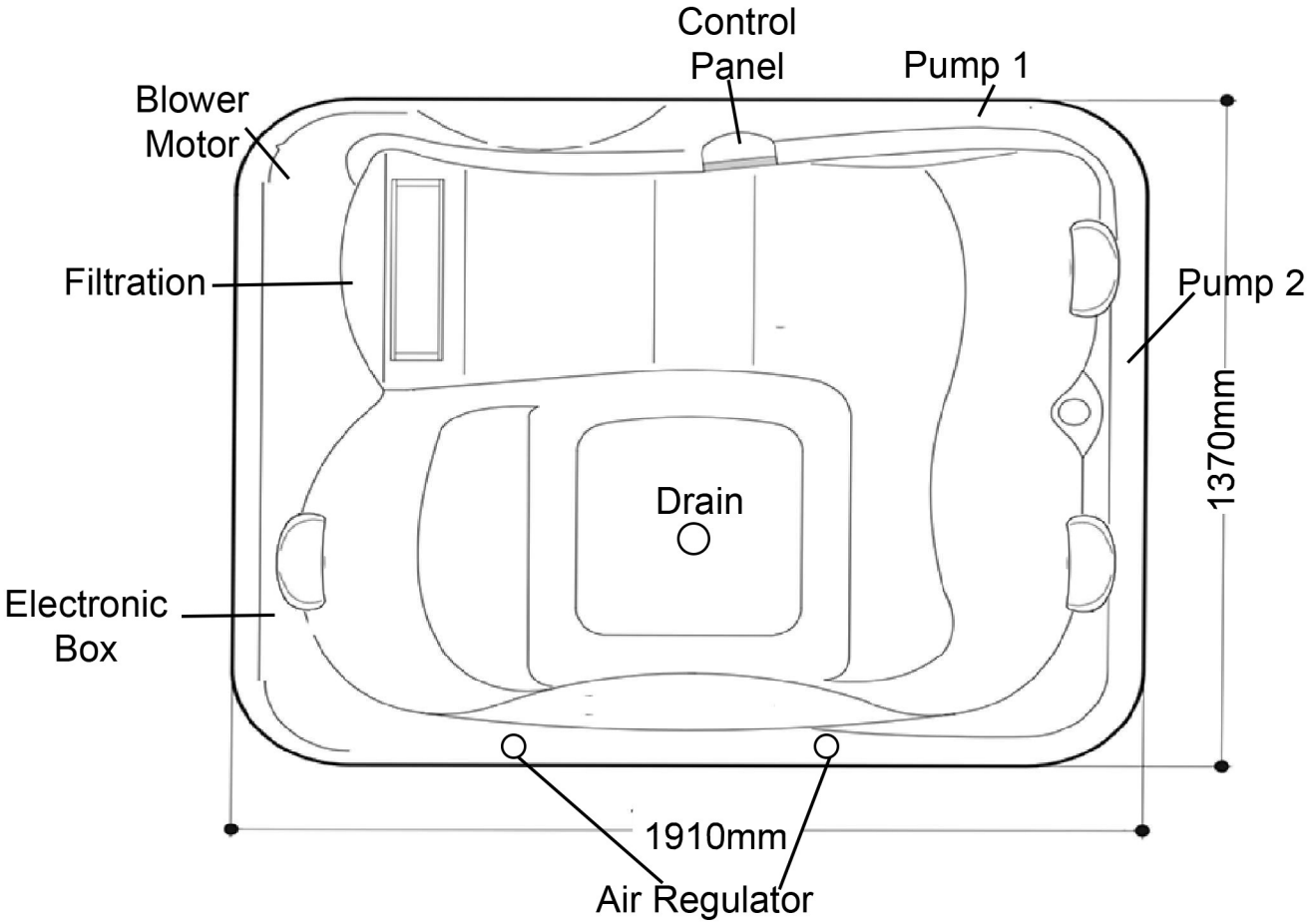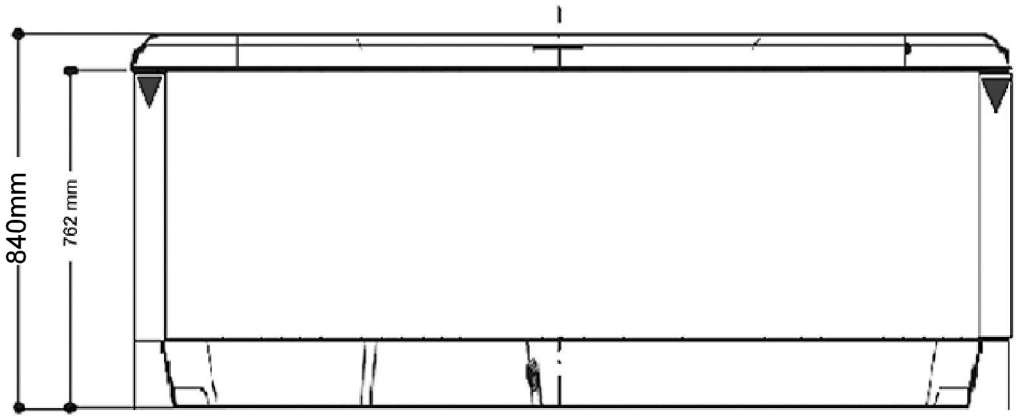
Size: L1910 x W1370 x H840mm