WovenGold
Pamper Your Senses

Carmenta

Technical Diagram

Size: 4200 x 2200 x 1100/1300 mm

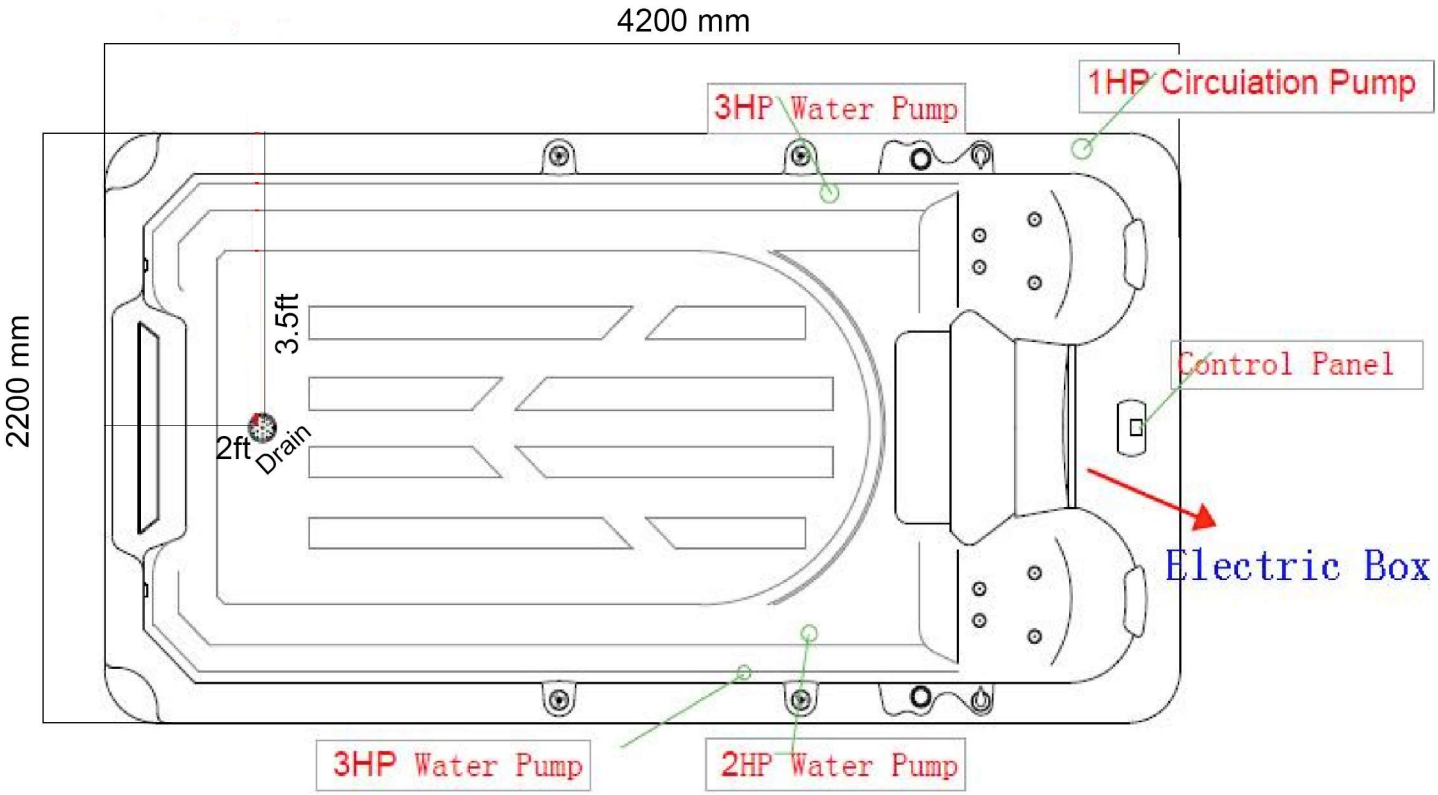

1	Maximum power consumption 9.5 KW
2	Water capacity 6500 Litre
3	Dry weight 800 KGS approx