WovenGold
pamper your senses

ENVOY

Technical Diagram
Size: 3800 x 2400 x 950 (MM)

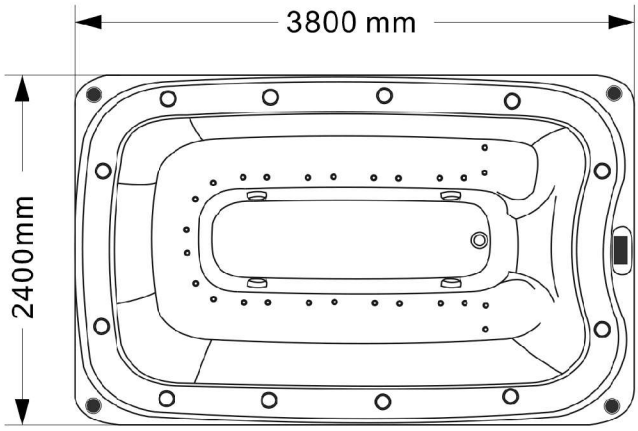

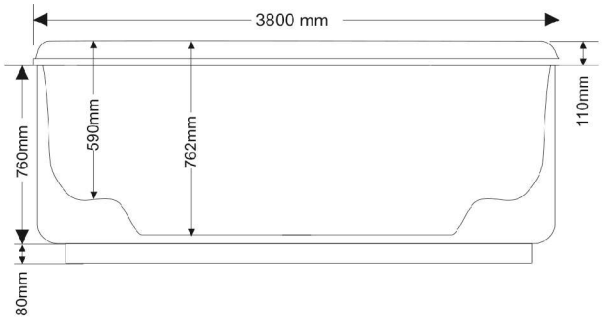

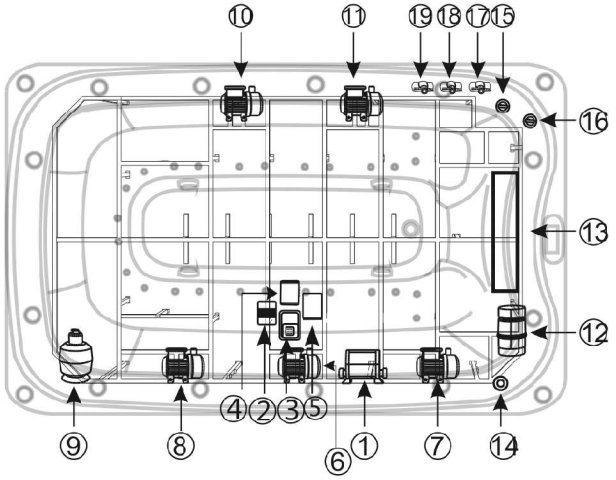

1	Online heating System
2	Ozoner Generator1 For Spa
3	Transformer into 12V for magnetic valve
4	LED Synchronizer
5	Controller For Magnetic Value&Water-Level Sensor
6	Whirlpool Pump 1
7	Circulate Pump 1 For Spa
8	Whirlpool Pump 2
9	Sand Filter
10	Whirlpool Pump 3
11	Circulate Pump 2 For Water tank
12	Air Blower
13	Water tank
14	Cable
15	Spa bottom draining outlet
16	Water tank bottom draining outlet
17	Water tank top draining outlet
18	Sandfilter draining outlet
19	Water tank automatic filling inlet