WovenGold
pamper your senses

GRANDEE

Technical Diagram
Size: 2400 x 2200 x 950 (MM)

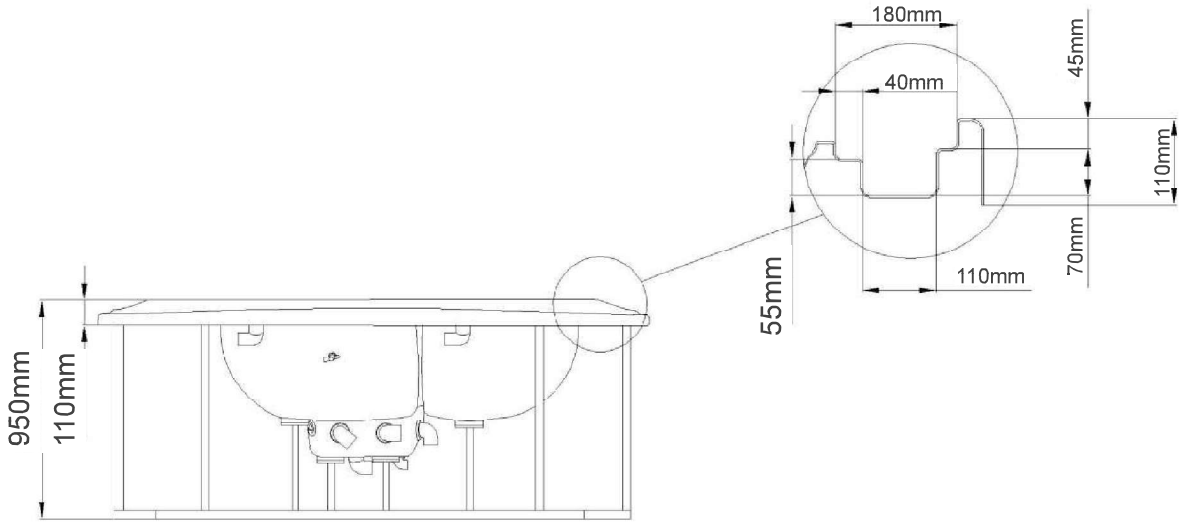

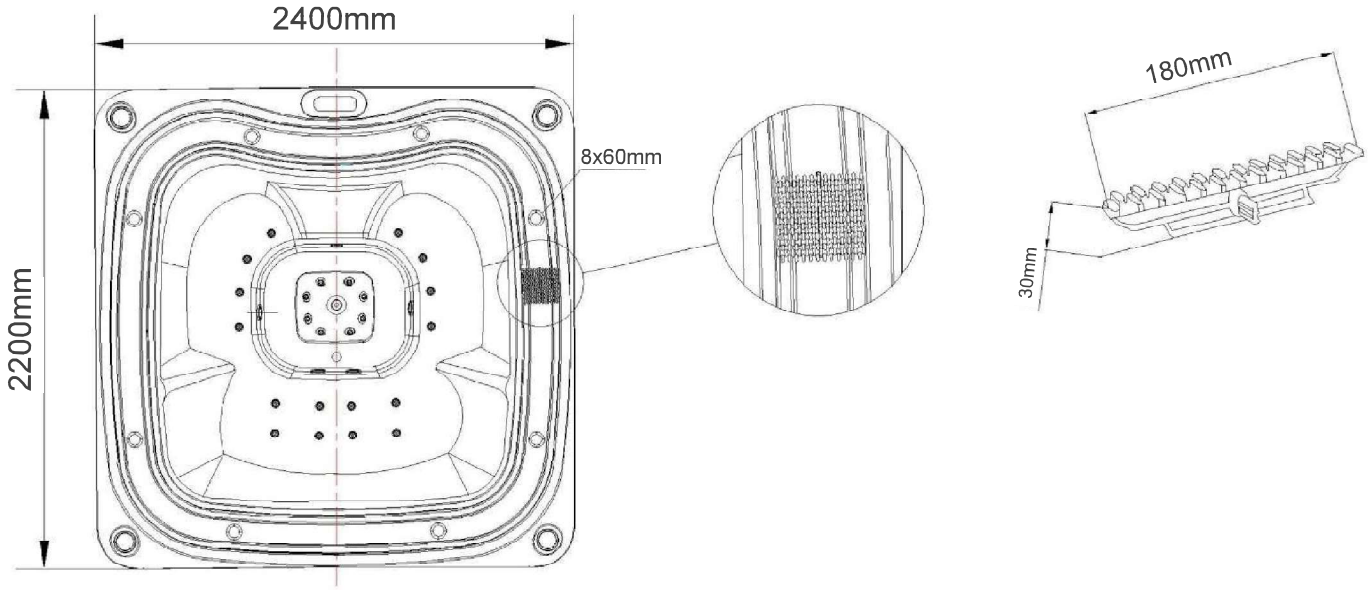

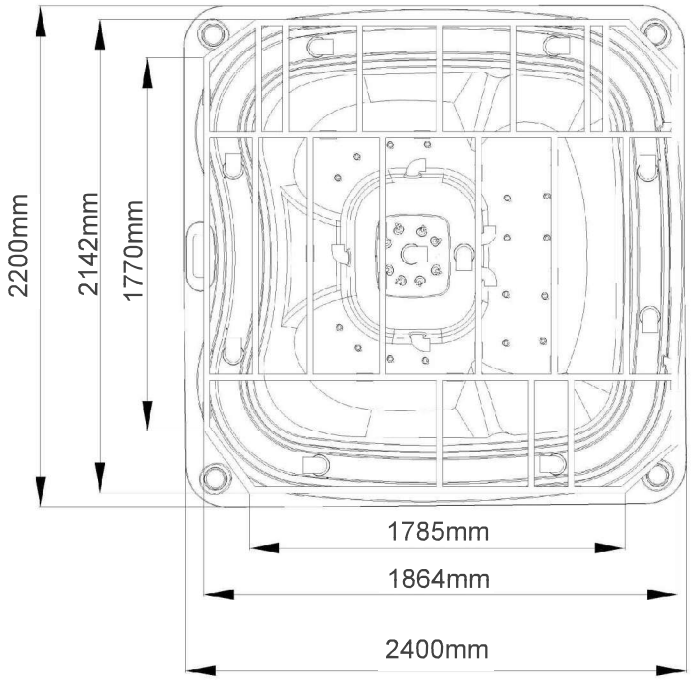

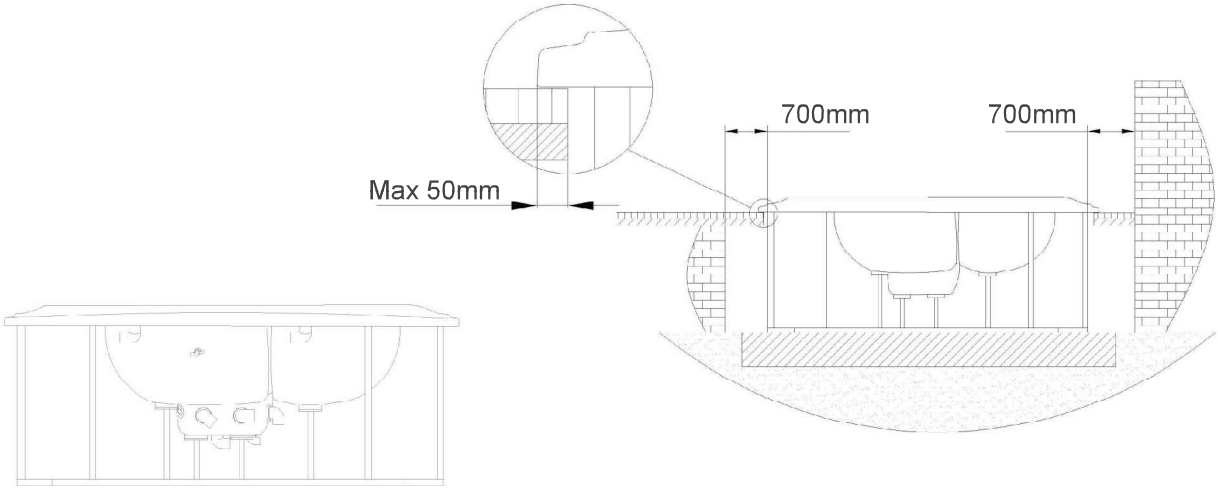

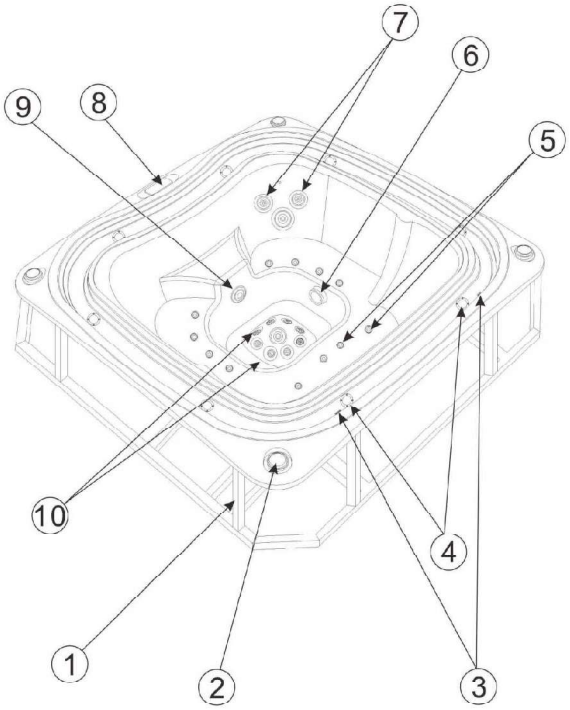

1	Stainless Steel Frame
2	Pop-up Speaker (Optional)
3	Release Air Hole For Water Tank
4	Drain Water Hole To Water Tank
5	Air Jet
6	Suction
7	Stainless Steel Jet
8	Control Panel
9	Underwater Light
10	Stainless Steel Foot Massage Jet